ПІДТВЕРДЖУВАЛЬНЕ ПОВІДОМЛЕННЯ

Державне підприємство
«Український науково-дослідний і навчальний центр
проблем стандартизації, сертифікації та якості»
(ДП «УкрНДНЦ»)

Наказ від 17.12.2019 № 431

EN 1789:2007+A2:2014

Medical vehicles and their equipment —
Road ambulances

прийнято як національний стандарт
методом підтвердження за позначенням

ДСТУ EN 1789:2019
(EN 1789:2007 + A2:2014, IDT)

Колісні транспортні засоби.
Автомобілі швидкої медичної допомоги

З наданням чинності від 2020–01–01

Відповідає офіційному тексту

З питань придбання офіційного видання звертайтесь
до національного органу стандартизації
(ДП «УкрНДНЦ» http://uas.org.ua)

EUROPEAN STANDARD

NORME EUROPÉENNE

EUROPÄISCHE NORM

EN 1789:2007+A2

September 2014

ICS 11.160; 43.160

Supersedes EN 1789:2007+A1:2010

English Version

Medical vehicles and their equipment - Road ambulances

Véhicules de transport sanitaire et leurs équipements - Ambulances routières

Rettungsdienstfahrzeuge und deren Ausrüstung - Krankenkraftwagen

This European Standard was approved by CEN on 24 February 2007 and includes Amendment 1 approved by CEN on 6 March 2010 and Amendment 2 approved by CEN on 14 July 2014.

CEN members are bound to comply with the CEN/CENELEC Internal Regulations which stipulate the conditions for giving this European Standard the status of a national standard without any alteration. Up-to-date lists and bibliographical references concerning such national standards may be obtained on application to the CEN-CENELEC Management Centre or to any CEN member.

This European Standard exists in three official versions (English, French, German). A version in any other language made by translation under the responsibility of a CEN member into its own language and notified to the CEN-CENELEC Management Centre has the same status as the official versions.

CEN members are the national standards bodies of Austria, Belgium, Bulgaria, Croatia, Cyprus, Czech Republic, Denmark, Estonia, Finland, Former Yugoslav Republic of Macedonia, France, Germany, Greece, Hungary, Iceland, Ireland, Italy, Latvia, Lithuania, Luxembourg, Malta, Netherlands, Norway, Poland, Portugal, Romania, Slovakia, Slovenia, Spain, Sweden, Switzerland, Turkey and United Kingdom.

© 2014 CEN All rights of exploitation in any form and by any means reserved worldwide for CEN national Members.

Ref. No. EN 1789:2007+A2:2014 E

Contents

Page

Foreword 5

[A2] Introduction [A2] 6

1 Scope 7

2 Normative references 7

3 Terms and definitions 9

4 Requirements 11
4.1 General requirements 11
4.1.1 General 11
4.1.2 Maximum overall dimensions 11
4.1.3 Wheel arch clearance 11
4.2 [A2] Performance-braking and acceleration [A2] 11
4.2.1 Acceleration 11
4.2.2 Braking 12
4.2.3 Safety system 12
4.3 Electrical requirements 12
4.3.1 General 12
4.3.2 Electromagnetic compatibility (EMC) – Communication equipment 12
4.3.3 Battery and alternator 12
4.3.4 Electrical installation 13
4.3.5 Visual and audible warning system 14
4.4 Vehicle body 14
4.4.1 Fire safety 14
4.4.2 Driver's seat configuration 14
4.4.3 Minimum loading capacity 14
4.4.4 Bulkhead 15
4.4.5 Openings (doors, windows, emergency exits) 16
4.4.6 Loading area 17
4.5 Patient's compartment 18
4.5.1 General 18
4.5.2 Patient's compartment dimensions 19
4.5.3 Patient and attendant seating 23
4.5.4 Ventilation and anaesthetic gas scavenging systems 24
4.5.5 Temperature system 25
4.5.6 Interior lighting 25
4.5.7 Interior noise level 26
4.5.8 Holding system for infusion 26
4.5.9 Mounting systems 26
4.5.10 Mass reserve 27

5 Testing 27
5.1 General 27
5.2 Testing of the interior noise level 27
5.2.1 [A2] Specific measurement conditions [A2] 27
5.2.2 Measurements 28
5.2.3 Establishment of compliance 29
5.3 Testing of the acceleration 30
5.4 Testing of maintain systems and fixations of the equipment in the patient's compartment 30
5.4.1 General 30

5.4.2 Testing of the stretcher fixations on the vehicle floor 32
5.4.3 Testing of the medical devices fixations 33
5.4.4 Testing of furniture 33
5.4.5 Test procedure 33
5.5 [A2] Testing of rounded edges and radius inside the patient's compartment [A2] 34
5.5.1 [A2] Testing of rounded edges [A2] 34
5.5.2 Testing of rounded edges and radius inside the patient's compartment 35
5.6 Procedure to verify the patient's compartment specifications 35
5.7 Procedure to verify the loading area specifications 36
5.7.1 General 36
5.7.2 Procedure to verify the loading angle of 16° 36
5.8 Procedure to verify the dimensions of the patient's compartment 37
5.8.1 Type A and B road ambulances 37
5.8.2 Type C road ambulances 37
5.9 Procedure to verify the seats dimensions of the patient's compartment 38
5.10 Testing of the ventilation system 39
5.11 Testing of the heating system 39
5.12 Testing of the cooling system 40
5.12.1 Test procedure 40
5.12.2 Testing of independent air conditioning system 40
5.13 Testing of interior lighting 41
5.14 Testing of infusion holding system 41

6 Medical devices 41
6.1 Provision of medical devices 41
6.2 Medical devices storage 41
6.3 Requirements for medical devices 42
6.3.1 General 42
6.3.2 Temperature 42
6.3.3 Humidity and ingress of liquids 42
6.3.4 Mechanical strength 42
6.3.5 Fixation of devices 43
6.3.6 Electrical safety 43
6.3.7 User interface 43
6.3.8 Gas installation 43
6.3.9 Marking and instructions 45
6.3.10 Maintenance 45
6.4 Mechanical strength – Test methods for medical devices for use in road ambulances 45
6.4.1 Vibration and bump test 45
6.4.2 Free fall 46
6.5 List of equipment 46

7 Conformity assessment 53

8 Requirements to be met for a Certificate of Compliance 53

Annex A (informative) [A2] Test summary [A2] 55

Annex B (informative) [A2] Definition of ambulance body styles [A2] 56

B.1 General 56

B.2 Van based Ambulance 56

B.3 Fully independent box body 57

Annex C (informative) [A2] Recognition [A2] 58

C.1 Recognition and visibility of ambulances 58

C.2 Recognition of personnel 58

Annex ZA (informative) [A1] [A2] **Relationship between this European Standard and the Essential Requirements of EC Directive 93/42/EEC on Medical Devices and Directive 2007/46/EC of the European Parliament and of the Council of 5 September 2007 establishing a framework for the approval of motor vehicles and their trailers, and of systems, components and separate technical units intended for such vehicles** [A2] 59

Bibliography 60

Foreword

This document (EN 1789:2007+A2:2014) has been prepared by Technical Committee CEN/TC 239 “Rescue systems”, the secretariat of which is held by DIN.

This European Standard shall be given the status of a national standard, either by publication of an identical text or by endorsement, at the latest by March 2015, and conflicting national standards shall be withdrawn at the latest by March 2015.

Attention is drawn to the possibility that some of the elements of this document may be the subject of patent rights. CEN [and/or CENELEC] shall not be held responsible for identifying any or all such patent rights.

This document includes Amendment 1, approved by CEN on 2010-03-06 and Amendment 2, approved by CEN on 2014-07-14.

This document supersedes [A2] EN 1789:2007+A1:2010 [/A2].

The start and finish of text introduced or altered by amendment is indicated in the text by tags [A1] [/A1] and [A2] [/A2].

This document has been prepared under a mandate given to CEN by the European Commission and the European Free Trade Association, and supports essential requirements of EU Directive(s).

For relationship with EU Directive(s), see informative Annex ZA, which is an integral part of this document.

According to the CEN-CENELEC Internal Regulations, the national standards organizations of the following countries are bound to implement this European Standard: Austria, Belgium, Bulgaria, Croatia, Cyprus, Czech Republic, Denmark, Estonia, Finland, Former Yugoslav Republic of Macedonia, France, Germany, Greece, Hungary, Iceland, Ireland, Italy, Latvia, Lithuania, Luxembourg, Malta, Netherlands, Norway, Poland, Portugal, Romania, Slovakia, Slovenia, Spain, Sweden, Switzerland, Turkey and the United Kingdom.

A2 Introduction

In the development of the European standard EN during the 90's, Directive 70/156/EEC has been considered.

In October 2009, CEN/TC 239 appointed an ad-hoc group to evaluate the impact of the Directive 2007/46/EC which replaces Directive 70/156/EEC, on EN 1789:2007 and to assess its application in different member countries of CEN.

Moreover the definition of ambulance of the COMMISSION REGULATION (EU) No 678/2011 (14 July 2011 replacing Annex II and amending Annexes IV, IX and XI to Directive 2007/46/EC) refers to EN 1789:2007.

The appointed ad-hoc group reported its findings as follows:

— EN 1789:2007 has not been applied consistently by notified bodies since the text for verifying compliance is open to interpretation and may cause difficulties to Technical Services (TS) as defined in Directive 2007/46/EC, EN 1789:2007 or local authorities;

— these differences can lead to declarations that the same ambulance complies or does not comply with EN 1789:2007;

— manufacturers of ambulances may have the same problems of interpretation in the design of their ambulances;

— users of ambulances may have the same problems of interpretation that affects their responsibility.

This second amendment[1)] gives an answer to questions concerning the application of EN 1789:2007 and avoids differences in interpretation between such notified bodies to check compliance of vehicles specially adapted to medical transportation (Road ambulances).

NOTE Such as the demonstration of compliance to the requirements of 4.5.9 or 4.3. A2

1) A2 The first amendment published in 2010 only updates Table ZA.1 to consider the revision of Directive 93/42/EEC. A2

1 Scope

This European Standard specifies requirements for the design, testing, performance and equipping of road ambulances used for the transport and care of patients. It contains requirements for the patient's compartment.

This European Standard does not cover the requirements for approval and registration of the vehicle and the training of the staff which is the responsibility of the authority/authorities in the country where the ambulance is to be registered.

This European Standard is applicable to road ambulances capable of transporting at least one person on a stretcher.

Requirements are specified for categories of road ambulances based in increasing order of the level of treatment that can be carried out. These are the patient transport ambulance (types A_1 A_2), the emergency ambulance (type B) and the mobile intensive care unit (type C).

This European Standard gives general requirements for medical devices carried in road ambulances and used therein and outside hospitals and clinics in situations where the ambient conditions can differ from normal indoor conditions.

2 Normative references

The following referenced documents are indispensable for the application of this document. For dated references, only the edition cited applies. For undated references, the latest edition of the referenced document (including any amendments) applies.

[A2] EN 3-7:2004+A1:2007 [A2], *Portable fire extinguishers — Part 7: Characteristics, performance requirements and test methods*

[A2] EN 420:2003+A1:2009 [A2], *Protective gloves — General requirements and test methods*

[A2] EN 455-1:2000 [A2], *Medical gloves for single use — Part 1: Requirements and testing for freedom from holes*

[A2] EN 455-2:2009+A2:2013 [A2], *Medical gloves for single use — Part 2: Requirements and testing for physical properties*

[A2] *deleted text* [A2]

EN 737-1:1998, *Medical gas pipeline systems — Part 1: Terminal units for compressed medical gases and vacuum*

EN 737-3:1998, *Medical gas pipeline systems — Part 3: Pipelines for compressed medical gases and vacuum*

[A2] *deleted text* [A2]

[A2] EN 794-3:1998+A2:2009 [A2], *Lung ventilators — Part 3: Particular requirements for emergency and transport ventilators*

[A2] *deleted text* [A2]

[A2] EN 1041:2008+A1:2013, *Information supplied by the manufacturer of medical devices* [A2]

[A2] EN 1865-1:2010, *Patient handling equipment used in road ambulances — Part 1: General stretcher systems and patient handling equipment* [A2]

[A2] EN 1865-2:2010, *Patient handling equipment used in road ambulances — Part 2: Power assisted stretcher*

EN 1865-4:2012, *Patient handling equipment used in road ambulances — Part 4: Foldable patient transfer chair*

EN 1865-5:2012, *Patient handling equipment used in road ambulances — Part 5: Stretcher support* [A2]

[A2] EN 12470-1:2000+A1:2009 [A2], *Clinical thermometers — Part 1: Metallic liquid-in-glass thermometers with maximum device*

[A2] EN 13501-1:2007+A1:2009, *Fire classification of construction products and building elements — Part 1: Classification using test data from reaction to fire tests* [A2]

[A2] EN 13544-1:2007+A1:2009 [A2], *Respiratory therapy equipment — Part 1: Nebulizing systems and their components*

[A2] EN 14052:2012+A1:2012 [A2], *High performance industrial helmets*

[A2] EN 60068-2-6:2008, *Environmental testing — Part 2-6: Tests — Tests Fc: Vibration (sinusoidal) (IEC 60068-2-6:2007)* [A2]

[A2] EN 60068-2-29:1993 [A2], *Basic environmental testing procedures — Part 2: Tests; test Eb and guidance: bump (IEC 60068-2-29:1987)*

EN 60068-2-32, *Basic environmental testing procedures — Part 2: Tests; test Ed: free fall (IEC 60068-2-32:1975 + A1:1982 + A2:1990)*

[A2] EN 60068-2-64:2008, *Environmental testing — Part 2-64: Tests — Test Fh: Vibration, broadband random and guidance (IEC 60068-2-64:2008)* [A2]

EN 60601-1, *Medical electrical equipment*

EN 60601-2, *Medical electrical equipment*

[A2] EN 60601-2-4:2011, *Medical electrical equipment — Part 2-4: Particular requirements for the basic safety and essential performance of cardiac defibrillators (IEC 60601-2-4:2010)* [A2]

[A2] EN ISO 407:2004 [A2], *Small medical gas cylinders - Pin-index yoke-type valve connections (ISO 407:2004)*

[A2] *deleted text* [A2]

[A2] EN ISO 5359:2008, *Low-pressure hose assemblies for use with medical gases (ISO 5359:2008)* [A2]

EN ISO 10079-1:1999, *Medical suction equipment — Part 1: Electrically powered suction equipment — Safety requirements (ISO 10079-1:1999)*

EN ISO 10079-2:1999, *Medical suction equipment — Part 2: Manually powered suction equipment (ISO 10079-2:1999)*

EN ISO 10079-3:1999, *Medical suction equipment — Part 3: Suction equipment powered from a vacuum or pressure source (ISO 10079-3:1999)*

[A2] EN ISO 10524-1:2006 [A2], *Pressure regulators for use with medical gases — Part 1: Pressure regulators and pressure regulators with flow-metering devices (ISO 10524-1:2006)*

[A2] EN ISO 10524-3:2006 [A2], *Pressure regulators for use with medical gases — Part 3: Pressure regulators integrated with cylinder valves (ISO 10524-3:2005)*

EN ISO 11197:2004, *Medical supply units (ISO 11197:2004)*

[A2] EN ISO 14971:2012 [A2], *Medical devices — Application of risk management to medical devices* [A2] *(ISO 14971:2007, Corrected version 2007-10-01)* [A2]

[A2] EN ISO 15002:2008 [A2], *Flow-metering devices for connection to terminal units of medical gas pipeline systems* [A2] *(ISO 15002:2008)* [A2]

[A2] EN ISO 15223-1:2012, *Medical devices — Symbols to be used with medical device labels, labelling and information to be supplied — Part 1: General requirements* [A2] *(ISO 15223-1:2012)* [A2]

[A2] EN ISO 19054:2006 [A2], *Rail systems for supporting medical equipment (ISO 19054:2005)*

[A2] EN ISO 20345:2011 [A2], *Personal protective equipment — Safety footwear (ISO 20345:2011)* [A2]

[A2] EN ISO 20471:2013, *High visibility clothing — Test methods and requirements (ISO 20471:2013, Corrected version 2013-06-01)* [A2]

[A2] *deleted text* [A2]

[A2] EN ISO 80601-2-55:2011, *Medical electrical equipment — Part 2-55: Particular requirements for the basic safety and essential performance of respiratory gas monitors (ISO 80601-2-55:2011)*

EN ISO 80601-2-61:2011, *Medical electrical equipment — Part 2-61: Particular requirements for basic safety and essential performance of pulse oximeter equipment (ISO 80601-2-61:2011)* [A2]

[A2] IEC 60364-7-721:2007, *Low-voltage electrical installations — Part 7-721: Requirements for special installations or locations — Electrical installations in caravans and motor caravans (IEC 60364-7-721:2007-04)* [A2]

[A2] *deleted text* [A2]

ISO 5128:1980, *Acoustics — Measurement of noise inside motor vehicles*

3 Terms and definitions

For the purposes of this document, the following terms and definitions apply.

3.1
patient and emergency patient
3.1.1
patient
person whose condition requires appropriately trained personnel to provide medical care and/or suitable transport

3.1.2
emergency patient
patient who through sickness, injury or other circumstances is in immediate or imminent danger to life unless emergency treatment and/or monitoring and suitable transport to diagnostic facilities or medical treatment is provided

3.2
ambulance
vehicle or craft intended to be crewed by a minimum of two appropriately trained staff for the provision of care and transport of at least one stretchered patient

3.3
types of road ambulances[2)]
3.3.1
type A: patient transport ambulance
road ambulance designed and equipped for the transport of patients who are not expected to become emergency patients.

Two types of patient transport ambulance exist:

type A_1: suitable for transport of a single patient;

type A_2: suitable for transport of one or more patient(s) (on stretcher(s) and/or chair(s))

3.3.2
type B: emergency ambulance
road ambulance designed and equipped for the transport, basic treatment and monitoring of patients

3.3.3
type C: mobile intensive care unit
road ambulance designed and equipped for the transport, advanced treatment and monitoring of patients

3.4
net vehicle mass
[A2] *deleted text* [A2]
[A2] *deleted text* [A2] mass according to 92/21/EEC modified of the road ambulance including the driver taken as 75 kg and all fixed installations

NOTE Loose portable patient handling, sanitary, medical and technical equipment are not included in net vehicle mass.

[A2] **3.5**
ambulance loading capacity
difference between the permissible gross vehicle mass and the mass according to 92/21/EEC modified of the road ambulance including the driver taken as 75 kg and all fixed installations, mass reserve according to 4.5.10 and all passengers

Note 1 to entry: This represents the mass that may be distributed on the road ambulance such that the permissible axle loads are not exceeded. [A2]

[A2] *deleted text* [A2]

[A2] **3.6** [A2]
fixation system
system or device to ensure the permanent fixation of medical devices or other equipment into the ambulance

[A2] **3.7** [A2]
maintain system
bracket or other interface device used to secure a mobile or transportable item of equipment or medical device of the vehicle without the use of tools

---

2) Road ambulances are road vehicles which comply with type approval for special use vehicles according to [A2] Directive 2007/46/EEC [A2] in the last applicable amended version.

3.8
Technical Service (TS)
body authorized according to directive 2007/46/EEC to decide the conformity of the ambulance as a road vehicle

3.9
means of verification (MoV)
deliverables or tests to be performed to allow the technical service to establish the compliance of the ambulance to EN 1789:2007 in the context of the vehicle type approval

3.10
non equipped ambulance
ambulance without any equipment as listed in Table 9 to Table 19

Note 1 to entry: Stretcher support as defined in EN 1865-5:2012 is included in the non-equipped ambulance.

4 Requirements

4.1 General requirements

4.1.1 General

deleted text

Road ambulances equipment shall, when operated in normal use and maintained according to the instructions of the manufacturer, cause no safety hazard which could reasonably be foreseen using risk management procedures in accordance with EN ISO 14971:2012 and which is connected with their intended application, in normal condition and in single fault condition.

deleted text

4.1.2 Maximum overall dimensions

The maximum overall dimensions shall be in accordance with the following:

— length in accordance with Directive 92/21/EEC modified;

— height 3 000 mm (measured at net vehicle mass excluding flexible antenna);

— width in accordance with Directive 92/21/EEC modified.

4.1.3 Wheel arch clearance

Vehicle converters shall maintain the minimum wheel arch clearance specified by the chassis manufacturer.

4.2 Performance-braking and acceleration

4.2.1 Acceleration

A road ambulance loaded to permissible gross vehicle mass shall be able to accelerate from 0 km/h to 80 km/h within 35 s.

4.2.2 Braking

An original equipment manufacturer's anti-lock braking system shall be fitted.

4.2.3 Safety system

The vehicle should be fitted with a control system for stabilisation and a passive safety system.

NOTE Examples of a control system for stabilisation are an electronic brake distribution system and traction control. Examples of a passive safety system could be an air bag, a collapsible steering column and an energy absorbing body structure.'

4.3 Electrical requirements

4.3.1 General

[A2] Electrical installations added to the one of the base vehicle shall comply with those clauses of IEC 60364-7-721:2007 which are applicable to ambulances. [A2]

[A2]

4.3.2 Electromagnetic compatibility (EMC) – Communication equipment

Communication equipment (e.g. radio installation) shall comply with national regulations.

For the supply system of the medical equipment the EN 60601-1 and EN 60601-2 series shall apply.

To minimize any risk to the safe operation of the complete ambulance and any of the equipment operated on or in the vehicle from the effects of electromagnetic influences created by the vehicle or its equipment, the complete operational vehicle should consists of components, equipment or sub systems that complies or are certified as conforming to the respective industry EMC regulations.

NOTE An ambulance as supplied and certified may not be fully equipped and therefore some responsibility for added equipment after conversion rests with the customer/user. [A2]

4.3.3 Battery and alternator

Batteries shall be positioned to allow maintenance without removing the battery from its securing device. The construction of the battery and all connections to it shall be such as to prevent any possibility of an inadvertent short circuit.

For types A_2, B and C road ambulances the electrical system shall be capable of holding a reserve of electrical power for restarting the engine.

The characteristics of starter batteries shall comply with Table 1. The characteristics of additional batteries, if fitted, shall comply with Table 1.

NOTE 1 Additional batteries may be required to power the medical devices carried on board and the intended use of the ambulance.

The characteristics of the alternator shall comply with Table 1.

Table 1 — Minimum capacity/power

		Type of road ambulance			
		A_1	A_2	B	C
Starter battery(ies)	Nominal voltage 12 V	54 Ah	54 Ah up to 4 seats and 80 Ah more than 4 seats in the compartment	80 Ah	80 Ah
	Nominal voltage 24 V	–	–	63 Ah (2 × 12 V)	63 Ah (2 × 12 V)
Additional [b] battery(ies)	Nominal voltage 12 V	–	–	80 Ah [a]	80 Ah
	Nominal voltage 24 V	–	–	63 Ah [a] (2 × 12 V)	63 Ah (2 × 12 V)
Alternator power		700 W	700 W	1 200 W	1 200 W

[a] Recommended for special operational conditions.

[b] Additional batteries shall have high cyclic stability (e.g. gel batteries) and of a sealed type.

NOTE 2 When the engine is idling electrical stability should be maintained between electrical load and alternator output. In order to achieve this it may be necessary to fit an electrical load [A2] prioritization [A2] device to the vehicle.

4.3.4 Electrical installation

4.3.4.1 In type B and C road ambulances there shall be a recessed externally mounted power connector to enable external power to be provided for operations such as the following:

— charging battery(ies);

— operating medical devices, when installed;

— operating a patient compartment heater, when installed;

— operating an engine preheater, when installed.

The connector for 110 V or 220/240 V, shall be a male connector and not interfere with the electrical and mechanical safety.

It shall be not possible to start the engine whilst it is connected to an external [A2] *deleted text* [A2] power supply unless an automatic mechanical disconnection is fitted.

If no automatic mechanical disconnection is fitted, the connector shall be on the driver's side.

The 110 V or 220/240 V circuit shall be protected either by an "earth leakage device" with a maximum setting of 30 mA or by a separate transformer. If the protection is given only by an "earth leakage device" there shall be a label near the plug that reads as follows: "CAUTION! CONNECT ONLY TO AN AUTHORISED SOCKET."

4.3.4.2 The patient's compartment shall be fitted with the minimum number of connections as given in Table 2. For these connections a permanent power supply shall exist.

Table 2 — 12 V connections for medical devices in patient's compartment

	Type of road ambulance			
	A_1	A_2	B	C
Minimum number of connections	2	2	4	4

4.3.4.3 Any additional electrical systems fitted to the base vehicle shall be separate from the base vehicle electrical system and the body or chassis shall not be used as an earth return for additional circuits.

All circuits in the additional system(s) shall have separate overload protection[3)]. All circuits shall be well defined and cables clearly marked at the connection points and at a maximum of 1m intervals along its length.

[A2] The system shall have enough circuits and be so constructed that when/if a circuit fails some illumination and some power supply sources for medical technical equipment still work. [A2]

4.3.4.4 The wiring and, where applicable conduits, shall withstand vibrations. No wiring shall be located in or pass through conduit intended for medical gas installation. The wiring shall not be loaded higher than that stated by the wire manufacture.

4.3.4.5 Where there are different voltage systems, the connections shall be non-interchangeable.

[A2]

4.3.5 Visual and audible warning system

The vehicle shall be fitted with a visual warning and audible warning system to assist emergency passage. These systems shall comply with national regulations where they exist.

NOTE The visual and audible warning system is optional for type A ambulances according to national regulations. [A2]

4.4 Vehicle body

4.4.1 Fire safety

[A2] The interior materials shall conform to the specification of EN 13501-1:2007+A1:2009. [A2]

4.4.2 Driver's seat configuration

For all types of road ambulances the ergonomic space of the driver's compartment and of the seat adjustment as approved by the base [A2] *deleted text* [A2] manufacturer shall not be reduced.

4.4.3 Minimum loading capacity

The minimum loading capacity shall be in accordance with Table 3.

---

3) Overload protection may consist of either fuses or so called Electronic Management Control systems.

Table 3 — Minimum loading capacity (persons)

	Type of road ambulance			
	A_1	A_2	B	C
Number of seats and/or stretcher facilities (in addition to the drivers seat)	3	4	3	4 5 [a]
[a] With two stretchers.				

[A2] If needed, a notice shall be displayed in the drivers' compartment stating the maximum number of seated, wheelchair and stretcher patients and cab occupants that can be carried.

EXAMPLE 1

DRIVER COMPARTMENT: driver and no cab passenger with the following patient's compartment occupants

PATIENT COMPARTMENT:

— 3 seated persons and 1 stretcher person;

— or 4 seated persons and no stretcher;

— or 2 seated persons and 2 wheelchair occupants.

EXAMPLE 2

DRIVER COMPARTMENT: driver and one cab passenger with the following patient's compartment occupants

PATIENT COMPARTMENT:

— 2 seated persons and 1 stretcher person;

— or 2 seated persons and 1 wheelchair.

The notice shall be supplied by the ambulance builder taking account of the maximum weight capacity of the vehicle. [A2]

4.4.4 Bulkhead

A full bulkhead[4)] or a bulkhead with a door shall separate the driver's compartment from the patient's compartment. Where a door is fitted, it shall not be possible to drive the vehicle with the door in the open position. This door shall be secured against opening if the road ambulance is in motion.

One or two windows with a minimum separation of 100 mm shall be provided in the bulkhead [A2] *deleted text* [A2]. The windows shall allow direct visual contact with the driver. The opening area of the window shall have a maximum area of 0,12 m². It shall be secured against self-opening and shall have an adjustable blind or other means of preventing the driver being disturbed by the light of the patient's compartment.

4) Also called a "partition wall".

4.4.5 Openings (doors, windows, emergency exits)

4.4.5.1 General

There shall be a minimum of two openings – one at the rear (door/tailgate) and one at the side (door/window) of the patient's compartment.

All openings shall have seals to protect against the ingress of water.

All openings shall comply with the minimum dimensions set out in Table 4.

Table 4 — Minimum opening dimensions in the [A2] patient's [A2] compartment

		Type of road ambulance			
		A_1 [a] mm	A_2 [a] mm	B mm	C mm
Side opening	Height [c]	[b]	800	1.200	1.400
	Width [c]		600	660	660
Rear opening	Height	900	900	1.200	1.500
	Width	900	900	1.050	1.050

a Corner radius of conversions which reduce the opening area by less than 10 % are permitted.

b The dimensions provided by the original manufacturer shall not be reduced.

c If it is a window, the height and width dimensions may be interchanged.

See EN 1865 for stretcher dimensions which should be taken into account.

[A2] NOTE The side and/or rear doors can be used as emergency exit. [A2]

4.4.5.2 Doors

Each external door [A2] allowing direct access to [A2] the patient's compartment shall be fitted with a security system which enables the following:

a) lock and unlock from inside without use of a key[5];

b) lock and unlock from outside with use of a key[5][6];

c) unlock from the outside using a key[5] when the door is locked from the inside.

NOTE This security system may be integrated with an optional central locking system.

The patient's compartment doors shall be capable of being positively restrained in the open position.

---

5) The key can be a mechanical or non-mechanical device.

6) [A2] The key can be a mechanical or non-mechanical device. [A2]

An audible and/or visual signal shall warn the driver when any [A2] external door including those not allowing direct access to the patient's compartment, [A2] is not completely closed when the vehicle is in motion.

4.4.5.3 Windows

In the patient's compartment, there shall be a minimum of two external windows. There shall be one on each side or one on one side and the rear.

The windows shall be positioned or [A2] designed [A2] to ensure patient's privacy when required. [A2] *deleted text* [A2]

4.4.6 Loading area

The loading area dimensions shall be in accordance with Table 5.

Table 5 — Loading area dimensions

	Type of road ambulance			
	A_1	A_2	B	C
[A2] Tailgate height (in the open H_2 minimum position) (see Figure 1) [a]	1 800 mm	1 800 mm	1 900 mm	1 900 mm
Loading angle α (stretcher) maximum [A2]	16° [b]	16° [b]	16° [b]	16° [b]
Loading height (stretcher)	When the patient is manually loaded or unloaded on the stretcher, the centre of the stretcher handles shall be no more than 825 mm above ground level. The maximum height of either the floor or the loading holding assembly above ground level shall not exceed 750 mm at net vehicle mass plus loose equipment.			

[a] From ground to lowest point of fully opened tailgate at gross vehicle mass.

[b] The loading angle shall be kept as low as possible.

Where a ramp or lift is installed between ground level and vehicle floor level it shall be covered with [A2] an anti-slip [A2] surface and capable of taking a [A2] *deleted text* [A2] load of 350 kg. In the event of a power failure the loading device shall be capable of being operated manually.

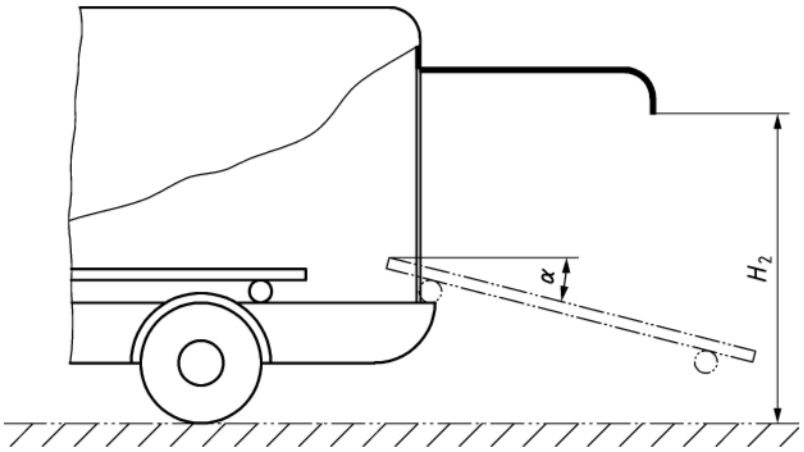

[A2] **Key**

H_2 tailgate height

α loading angle [A2]

Figure 1 — Tailgate height (in the open position)

4.5 Patient's compartment

4.5.1 General

The patient's compartment shall be designed and constructed to accommodate the medical devices listed in Tables 9 to 19 in accordance with the vehicle type.

The ceiling, the interior side walls and the doors of the patient's compartment shall be lined with a material that is non-permeable and resistant to disinfectant.

The edges of surfaces shall be designed and/or sealed in such a way that no fluid can infiltrate. If the floor arrangement does not allow fluids to flow away, one or more drain with plugs shall be provided.

Exposed edges that could come into contact with the occupant's hands, legs, head etc., during normal use shall have a radius of curvature of not less than 2,5 mm except in the case of projections of less than 3,2 mm, measured from the panel. In this case, the minimum radius of curvature shall not apply provided the height of the projection is not more than half its width and its edges are blunted.

All installations in the patient compartment above 700 mm shall not have sharp exposed edges and shall terminate in rounded edges. A sharp exposed edge is defined as an edge of a rigid material having a radius of curvature of less than 2,5 mm.

Edges that can be contacted by using the apparatus and procedure described in 5.4 shall have an edge with radius of curvature greater than or equal to 2,5 mm or shall be made from a non-rigid material. Medical equipment and their holding devices (for example stretchers, platforms, suction units etc.) are excluded.

Drawers [A2] shall [A2] be secured against self-opening and where lockers are fitted with doors that open upwards they [A2] shall [A2] be fitted with a positive hold open mechanism. Type B and C road ambulances shall be equipped with a lockable drugs compartment with security lock.

Floor coverings shall be chosen that will provide adequate grip for the attendant including when wet and should be durable and easy to clean.

Type B and C road ambulances shall be fitted with a hand-holding device positioned above the stretcher. For type C the hand-holding device shall be positioned along the longitudinal axis.

If the patient's compartment is to be equipped with a non-foldable sedan chair as defined in [A2] EN 1865-4:2012 [A2], space shall be provided with a width of at least 600 mm measured at elbow height and a ceiling height above the seat squab of at least 920 mm (see Table 7, footnote a).

Vehicle maintenance equipment (e.g. spare wheel and tools) shall not be accessible from within the patient's compartment.

4.5.2 Patient's compartment dimensions

4.5.2.1 General

The dimensions relate to the patient's compartment with lining. To achieve only structural solidity a reduction of the dimensions of up to 5 % is acceptable in limited areas; door openings excluded.

4.5.2.2 Patient's compartment dimensions for type A_1, A_2 and B road ambulances

The patient's compartment shall comply with the minimum dimensions set out in Figures 2 to 4 (without cupboards, seats, medical devices and equipment).

W = width measured from RH-side to LH-side, except the roof curvature;

L = length measured from rear to bulkhead at height of stretcher;

H = height, measured from floor to roof;

X = height of stretcher holding assembly to roof measured in the middle of the longitudinal axis of the stretcher;

h_1 = height between centre of seat and roof;

h_2 = height between centre of seat and floor covering.

[A2] NOTE Full line equals interior wall and ceiling of the patient's compartment. [A2]

Dimensions in millimetres

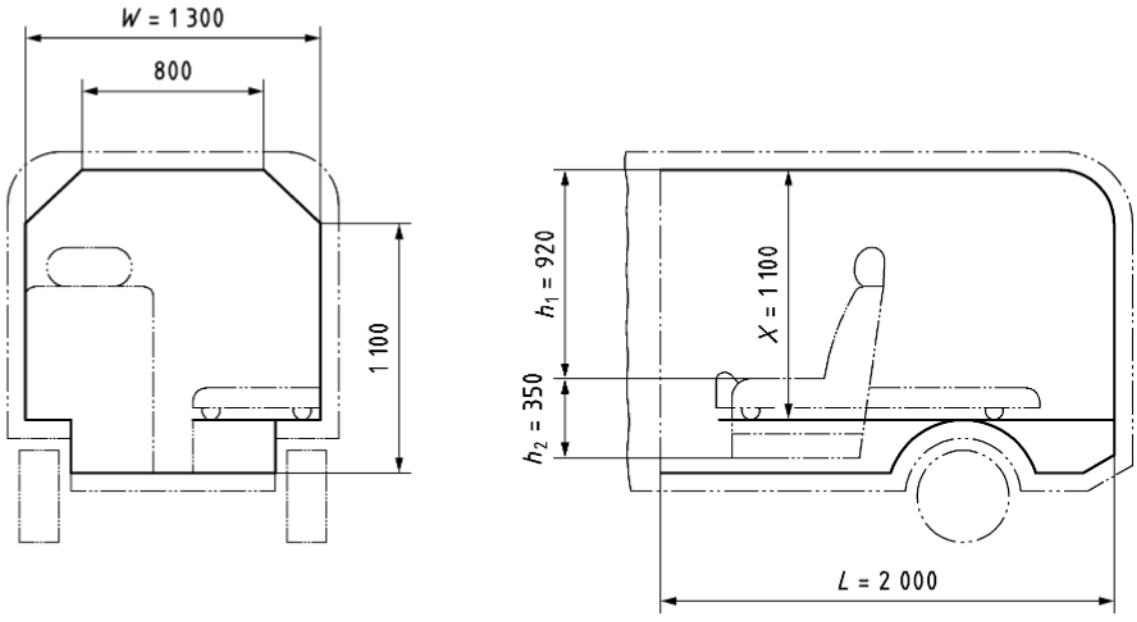

Figure 2 — Patient's compartment dimensions for type A_1 (schematic)

Dimensions in millimetres

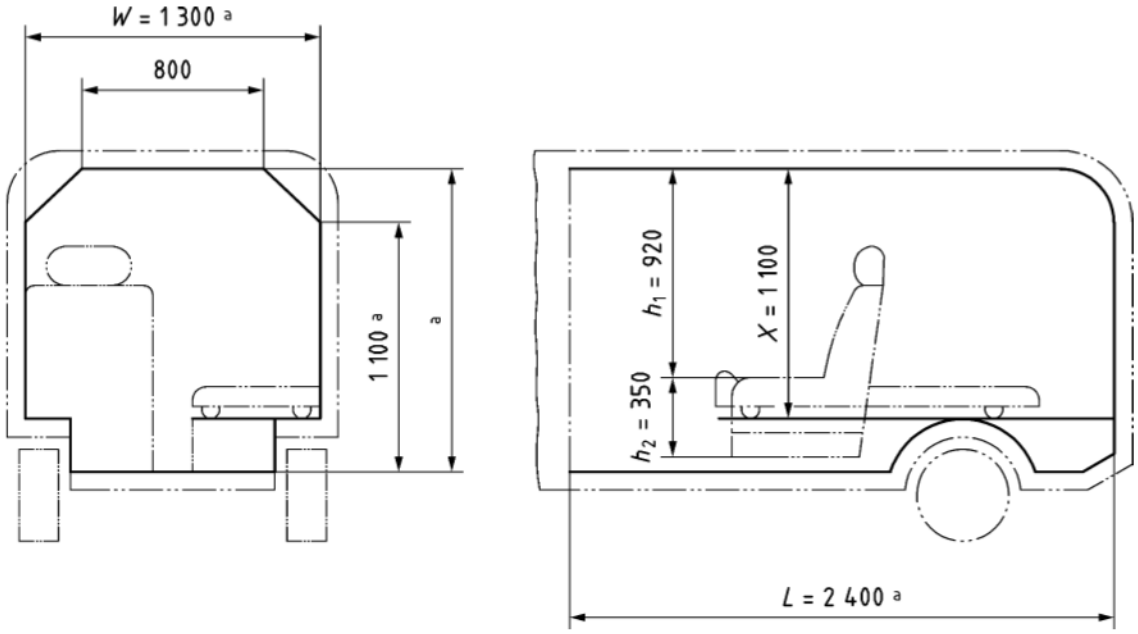

a Dimensions for Type A_2 with more than four seats in the patient's compartment. The length (L) shall be 3 100 mm, width (W) 1 500 mm. From a heights of 1 500 mm to 1 750 mm the sides shall have a radius no greater than 250 mm. The height (H) shall be 1 750 mm.

Figure 3 — Patient's compartment dimensions for type A_2 (schematic)

Dimensions in millimetres

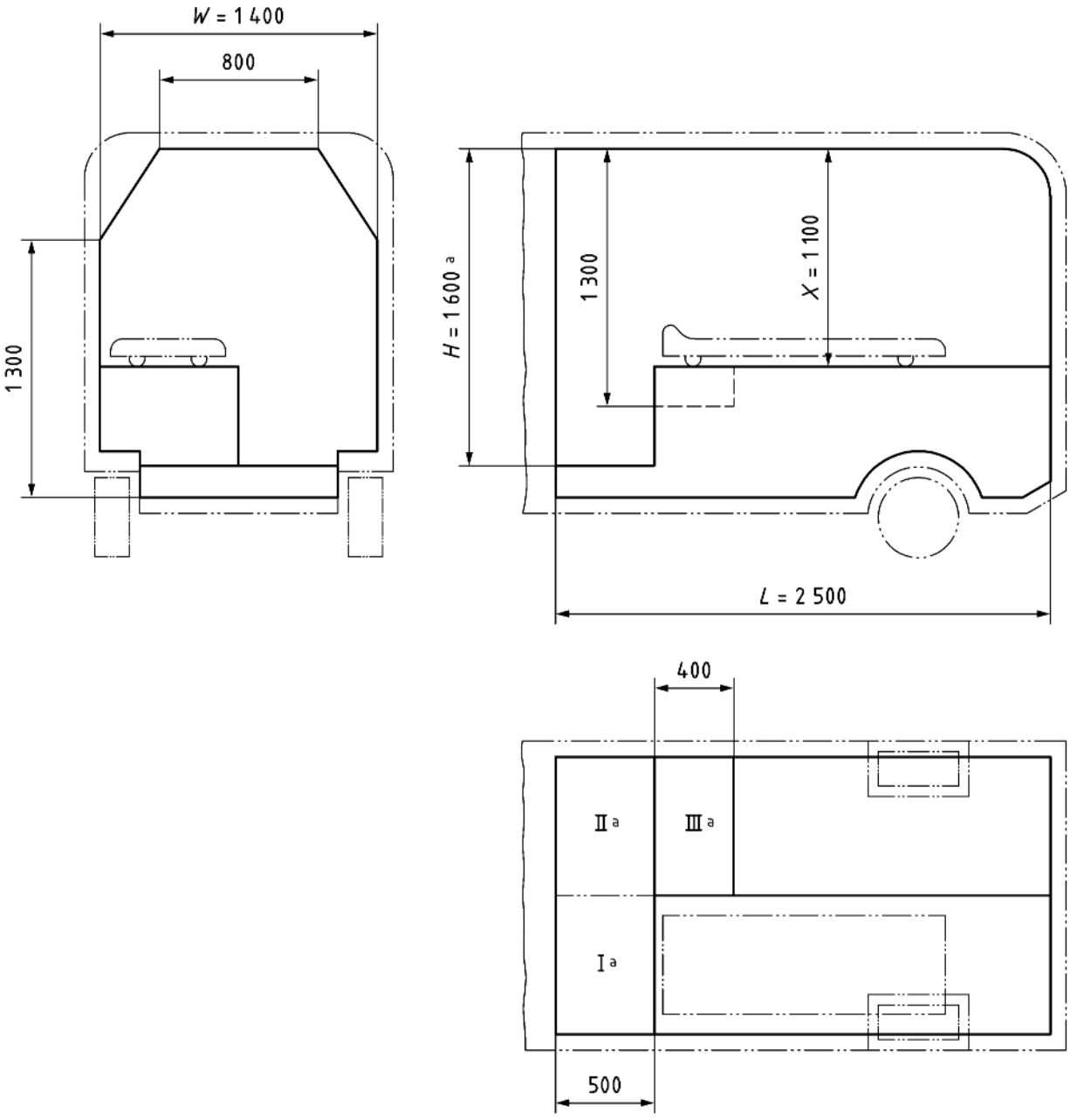

a Area I

When it is necessary to facilitate emergency treatment there shall be a minimum of 500 mm between the lining of the bulkhead and the head-end part of the stretcher frame or stretcher platform measured in the mid-axis and at the height of the stretcher. A minimum height of 1 600 mm shall be provided.

Area II

A minimum height of 1 600 mm shall be provided.

Area III

A flat and horizontal surface of a minimum length of 400 mm shall be provided alongside the stretcher from the head-end part of the stretcher frame. A minimum height of 1 300 mm shall be provided.

Figure 4 — Patient's compartment dimensions for type B (schematic)

4.5.2.3 Patient's compartment and treatment area dimensions for type C

In type C road ambulances the patient's compartment shall be large enough to incorporate the treatment area[7)] provided with dimensions as set out in Figure 5. Any protrusions into the treatment area shall be designed and constructed to fold away to provide these minimum dimensions. A seat (in stored position) and the medical technical equipment operated from this seat may intrude into the treatment area as follows:

— in this case the maximum intrusion shall be 125 mm at the head end of the stretcher

— or 125 mm on one side or a sum of 125 mm on both sides.

Verification of conformity of dimension of the treatment area shall be made when the stretcher is placed in the mean position of the treatment area.

[A2] h = A working height of the stretcher surface (excluding mattress and included a support platform where fitted) between 400 mm (minimum) and 650 mm (maximum) shall be ensured. [A2]

R = 500 mm (maximum), where R is the radius.

[A2] NOTE Full line represents the ergonomic space. [A2]

Dimensions in millimetres

7) Also called "ergonomic space".

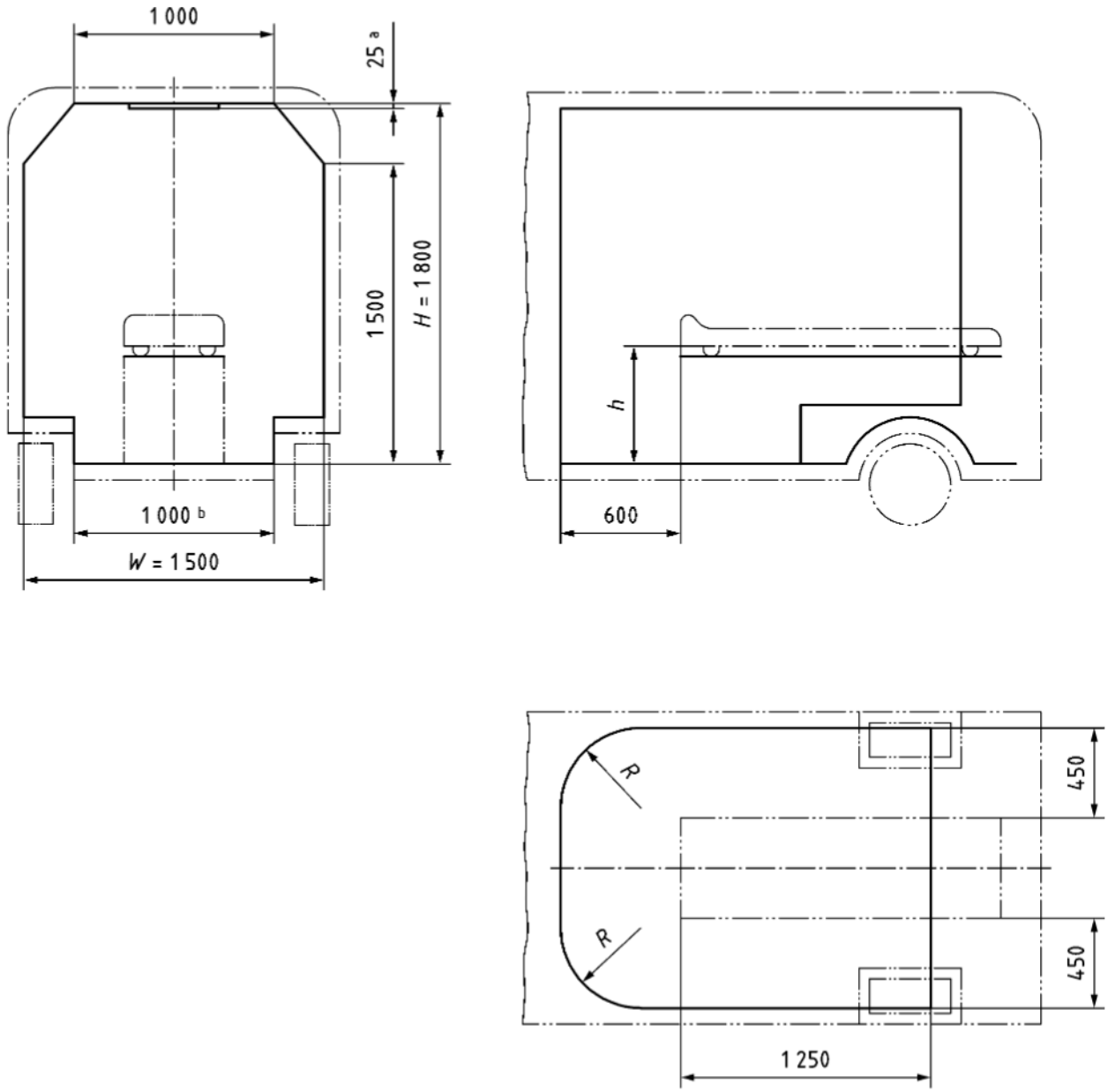

[a] Reduced (25 mm maximum) in the roof area over the stretcher.

[b] Where the height of the wheel arch exceeds 400 mm, the clearance width between the wheel arches above 400 mm shall not be less than 1 250 mm.

Figure 5 — Treatment area dimensions for type C

4.5.3 Patient and attendant seating

The minimum number of patient and attendant seats shall be as given in Table 6.

Table 6 — Number of patient and attendant seats

		Type of road ambulance			
		A_1	A_2	B	C
Minimum number		1	2	2	2
Position(s)	on one side of the stretcher	1	1	–	–
	on one side of the stretcher upper $^2/_3$ end	–	–	1	1
Position(s) at head or side of [A2] the [A2] stretcher		–	1 [a]	1	1

[a] Only when fewer than four seats.

The seats shall comply with the minimum dimensions set out in Table 7.

Table 7 — Minimum dimensions for seating

	Single seat (patient) mm	Single seat (attendant) mm	Folding seat (attendant) mm
Width	450	450	450
Depth	400	330	330
Height above seat [a]	920	920	920
Thickness of upholstery	50	50	50

[a] Measured vertically above and in the middle of the 75 kg loaded seat.

NOTE Where possible the seat height should be adjustable.

Seats fitted in accordance with Tables 6 and 7 shall be installed in either forward or rear-facing positions. [A2] *deleted text* [A2] Backrests shall be constructed to a minimum dimension of 300 mm × 100 mm, the upholstery of which shall be a minimum thickness of 20 mm.

[A2] All seats shall be equipped with head rests. [A2]

4.5.4 Ventilation and anaesthetic gas scavenging systems

4.5.4.1 Ventilation system

There shall be a ventilation system which shall provide a minimum of 20 air changes per hour when the vehicle is stationary.

4.5.4.2 Anaesthetic gas scavenging system (AGSS)

If the ambulance is intended to be used with delivery systems for anaesthetic gases e.g. N_2O or anaesthetic agent vapour it shall be equipped with an AGSS to make sure that the maximum permissible level of air contamination is not exceeded. This level is to be found in national or regional regulations.

NOTE Examples of an AGSS system can be found in EN 737-1 and EN ISO 7396-2.

4.5.5 Temperature system

4.5.5.1 Heating

In addition to the heating of the driver's compartment there shall be an independent adjustable system as follows:

— heating for type A and B road ambulance;

— fresh air heating for type C road ambulances.

This system shall be such that given an outside and inside temperature of –10 °C, or in extremely cold zones a temperature of –20 °C, the heating up to at least 5 °C shall not take longer than 15 min. After 30 min a temperature of at least 22 °C shall be reached in the patient's compartment. The inside temperature shall be measured in the centre of the stretcher(s) and at the [A2] mid-point [A2] from the heater outlets (if several outlets are available).

The heating shall be controlled by an adjustable thermostat or by an electronic climate control system. The actual temperature shall not vary from the set temperature by more than 5 °C.

The heating system shall be capable of meeting the performance criteria with the ventilation system switched off and the heating system set to re-circulate the air in the patient's compartment.

The installation of the system shall not encourage exhaust gases entering the patient's compartment.

4.5.5.2 Cooling

A cooling system is optional. Where a cooling system is fitted the following requirements are recommended.

The cooling system should be such that, given an outside and inside temperature of 32 °C, the cooling down to at most 27 °C in the patient's compartment should not take longer than 15 min. After 30 min a temperature of at most 25 °C should be reached. The inside temperature should be measured in the centre of the stretcher(s) and at the [A2] mid-point [A2] from the cooling outlets (if several outlets are available).

The installation of the system shall not encourage exhaust gases entering the patient's compartment.

4.5.6 Interior lighting

Natural colour balance lighting shall be provided as set out in Table 8.

NOTE The colour temperature of the light will change the appearance of skin and organs. Therefore it is important that the interior lighting is suitable for patient care during transport. It is believed that it is not necessary in ambulance use to define "daylight" or "natural colour balance" in a more exact way other than the colour temperature. Regarding the colour temperature a comparison can be that examining lights in hospitals are normally between 3 800 to 4 300 degrees Kelvin.

In type C there shall be an additional light within the treatment area with a minimum of 1 650 lx. It shall be measured at the stretcher surface in its lowest position. The minimum distance of the measurement shall be 750 mm below the light and in an area with a minimum diameter of 200 mm.

Table 8 — Patient's compartment illumination

		Type of road ambulance			
		A_1 lx	A_2 lx	B lx	C lx
Patient area (stretcher)	minimum:	100	100	300 [a]	300 [a]
Surrounding area	minimum:	30	30	50	50
[a] Additionally there shall be a facility for switching the lighting level down to $150\,^{+50}_{0}$ lx.					

Light levels shall be measured along the central longitudinal axis of the stretcher at the head, mid-point and foot position with the stretcher in its normal position for transportation in the ambulance.

4.5.7 Interior noise level

The interior noise level across the vehicle speed range shall be such that when tested in accordance with [A2] 5.2 [A2] it shall not exceed the maximum graphical line resulting from coordinates 70 dB(A) at 60 km/h or 40 % of the maximum speed, whichever is lower, to 78 dB(A) at 120 km/h or 60 % of the maximum speed, whichever is lower. A deviation of up to 3 dB(A) of the measured sound pressure level is permissible, within any vehicle type.

Noise measurements shall be made using the most appropriate gear for the speed being examined as determine by the base vehicle manufacturer.

4.5.8 Holding system for infusion

A holding system shall be provided to support two vertically fixed infusions in such a way as to use the maximum available height above the stretcher holding assembly. It shall be possible to position the infusions for use at either end of the stretcher holding assembly. The infusion mounting shall have a minimum capacity of 5 kg and be able to hold two bags of fluids independent of each other and shall be designed to [A2] minimize [A2] oscillation.

4.5.9 Mounting systems

Permanent seats and their anchorages in the patients' compartment, designed for use by patients and attendants when the ambulance is in motion, shall comply with the requirements of Directive 74/408/EEC modified. The seat belts anchorages of such seats shall comply with the requirements of Directive 76/115/EEC modified. The seat belts shall comply with the requirements of Directive 77/541/EEC modified. The forward facing seats shall be fitted with three-point seat belts of the type Ar4m

[A2] *deleted text* [A2]

All persons and items e.g. medical devices, equipment and objects normally carried on the road ambulance shall be restrained, installed or stowed to prevent them becoming a projectile when subjected to accelerations/decelerations of 10 g in the forward, rearward, left, right and vertical directions.

When subjected to these accelerations/decelerations, the distance travelled by a person or item shall not endanger the safety of persons on the road ambulance.

After being subjected to these accelerations/decelerations:

a) no items shall have sharp edges or endanger the safety of persons in the road ambulance;

b) the maximum distance the stretcher and any item attached to either the holding assembly or stretcher may travel shall be no more than 150 mm. The displacement of the patient during the test may exceed 150 mm;

c) it shall be possible to release all persons in the road ambulance without the use of equipment not carried on the road ambulance.

[A2] NOTE Requirement c) is considered to be fulfilled if it is possible to open at least one external access door or an emergency exit of the patient's compartment after testing according to 6.4.1. [A2]

All tested lockers, rails and non-dedicated storage locations or storage devices shall be labelled to show the total maximum permissible weight allowed.

[A2]

4.5.10 Mass reserve

The minimum mass reserve required for the listed sanitary, medical and technical devices in Tables 9 to 19 shall be as follows:

— road ambulance type A_1: 100 kg;
— road ambulance type A_2: 115 kg;
— road ambulance type B: 225 kg;
— road ambulance type C: 260 kg. [A2]

5 Testing

[A2]

5.1 General

For vehicles designed to carry stretcher(s) all shall be in place during testing according to 5.2 and 5.3. Each stretcher shall be loaded according to this standard and be tested in the normal position for use.

The general tolerances used are those for the automotive regulation.

NOTE Surrogate stretcher(s) can be used. [A2]

5.2 Testing of the interior noise level

[A2]

5.2.1 Specific measurement conditions [A2]

The measurements of the interior noise level in the patient's compartment shall be taken under the conditions given in ISO 5128:1980 with the following exceptions:

— the road ambulance shall be provided with the permanently installed equipment specified in this European Standard;

[A2] NOTE 1 Permanent equipment(s) means stretcher(s), their mattresses and accessories that cannot be removed without using tools delivered with the ambulance. [A2]

— contrary to the minimum tyre wear of 300 km specified in ISO 5128:1980, 8.1, new tyres without wear may be used;

— apart from the requirements in ISO 5128:1980, 8.3, the stretcher trays shall be in the normal position according to the manufacturer's recommendations;

— the measurement shall be made at a constant speed in accordance with ISO 5128:1980, 8.4.1 b);

— the measurements in accordance with ISO 5128:1980, 8.4.2 and 8.4.3, are not necessary;

— measurements shall only be taken in the patient's compartment and are required on all seats of the patient's compartment (including lying/carrying chair) according to ISO 5128:1980, 9.1, (but only in the longitudinal median plane of the seat) and on all stretchers according to ISO 5128:1980, 9.3;

— determination of octave and terz spectrums, according to ISO 5128:1980, 10.6, is not necessary;

— during the measurements, the audible warning and communication system shall be switched off.

〚A2〛 NOTE 2 Values are Leq (average). 〚/A2〛

〚/A2〛

5.2.2 Measurements

The noise level of the vehicle at the speed according to 4.5.7 is determined by estimating the interior noise level for five speeds, one at each end and three evenly distributed between the end points.

For each speed, two measurements are carried out.

For a given speed, the test result is the average of these two measurements.

EXAMPLE An example of measurements according to ISO 5128:1980 is given in Figure 6.

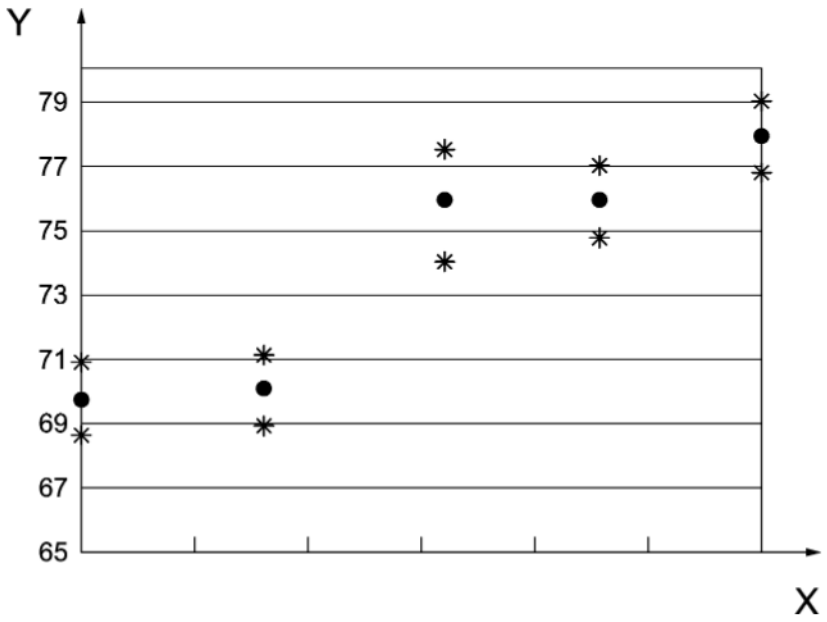

Key

X different speeds in km/h

Y noise level in dB (A)

✳ measurement

● test result (average of 2 measurements)

Figure 6 — Example of measurement

5.2.3 Establishment of compliance

The regression line is drawn from the five test results.

Each point of this regression line is the interior noise level for the considered speed.

The interior noise level shall not exceed the line resulting coordinates 70 dB(A) at 60 km/h or 40 % of the maximum speed, taking the lowest speed, and 78 dB(A) at 120 km/h or 60 % of the maximum speed, taking the lowest speed.

Test results shall not differ by more than +3 dB(A) of this limit line.

EXAMPLE An example is given in Figure 7.

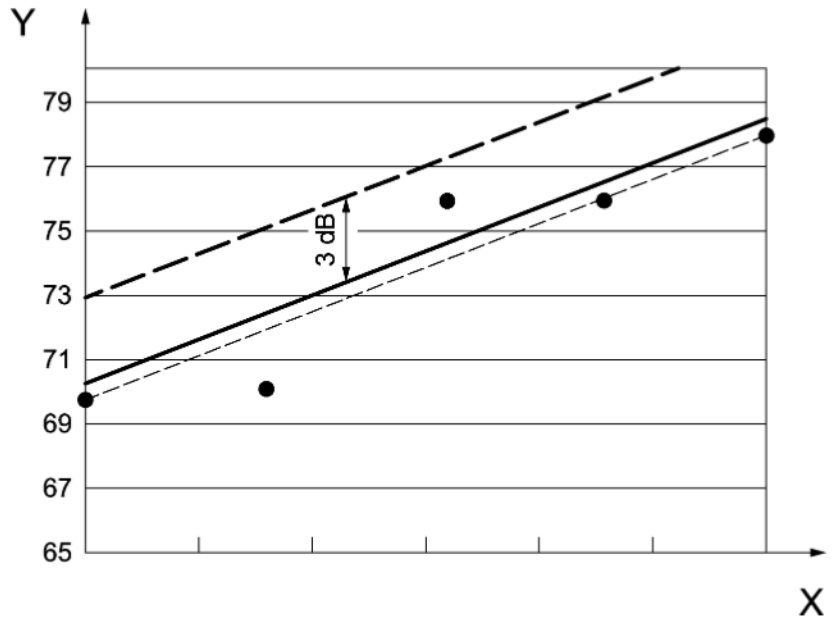

Key

X different speeds in km/h

Y noise level in dB (A)

——— limit for the interior noise level

_ _ _ _ _ interior noise level (regression line of the test results)

– – – limit for the measured pressure level

● measured pressure level (test results)

Figure 7 — Example of result 〈A2〉

5.3 Testing of the acceleration

The road surface of the test track shall be dry, level to within a longitudinal slope of 1 % and the wind velocity shall be a maximum 3 m/s.

The acceleration time shall be measured twice in each direction and the test runs completed in close succession. The result shall be the mean of the four readings.

5.4 Testing of maintain systems and fixations of the equipment in the patient's compartment

〈A2〉

5.4.1 General

To verify the requirements of 4.5.9 (strength of mounting system in the patient's compartment) on a new vehicle, a dynamic test under 5 axis, ± x'x, ± y'y and for + z'z axis shall be performed (see Figure 8).

It is permissible to perform the test on each direction on a fresh sample at the request of the manufacturer.

Each direction in the test is an independent test. Use of fresh sample body is therefore allowed.

NOTE 1 Test configuration is defined on the principle of the worst case criteria to limit the number of tests.

NOTE 2 Bodies in white or chassis cab in white plus box bodies can be used for test purposes.

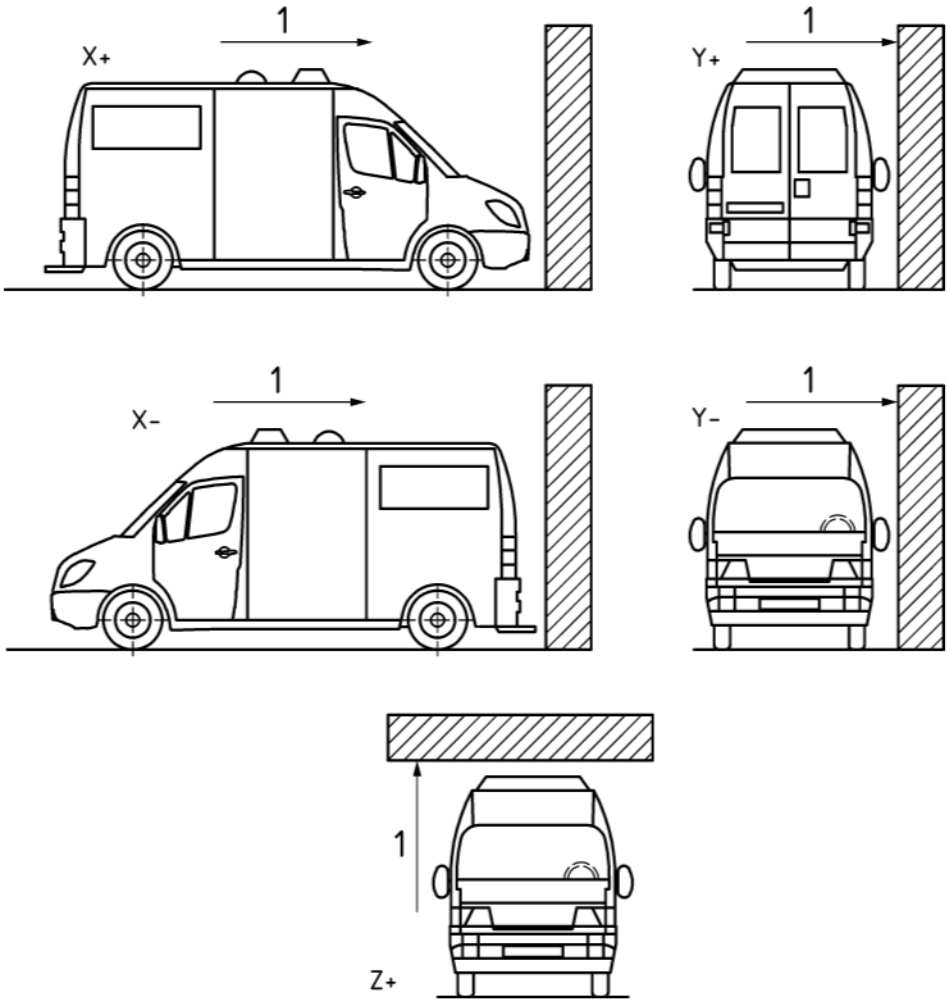

Figure 8 — Test directions for dynamic test

The maximum test mass for which the devices are qualified, shall be indicated by a label.

The method used to secure the vehicle during the test shall not be such as to strengthen the body or the arrangement of the patient's compartment or to lessen the normal deformation of the structure.

Securing of the vehicle or body shell:

The only reinforcements allowed are a sub frame under the original van shell or chassis longitudinal box sections or chassis rails to fix the body/shell to the test facility. For a box body, a sub frame representing the chassis can be used in conjunction with the original attachment points under the box designated for fixing to the vehicle chassis.

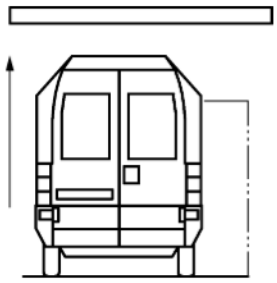

Figure 9 — Supporting point for Z'Z axis

NOTE 3 A supporting point (not a fixation) for Z'Z axis can be used as shown on Figure 9.

In the case of a fully independent box body, it is possible to test it alone.

Types of ambulance vehicles are defined in Annex C.

To check 4.5.9 on a new vehicle, a dynamic test in the 5 directions shall be carried out.

Dynamic test is the reference method.

Manufacturer should present to TS documentation of the fixation and mounting manufacture approach prior to tests.

For a modification on a previously dynamically tested and approved ambulance body/shell, a dynamic test or static test of the modified components or computer simulation can be presented depending on the nature of the change. The appropriate method shall be agreed with the approval authority.

Documentation of all modifications will be added to the original tests documentation.

To verify the requirement of 4.5.9 c), the TS will verify that at least one patient's compartment door or an emergency exit can be used after the test without using tools.

For racks, rails and non-dedicated storage devices or storage, the TS shall state in the test report the maximum approved load. It is the responsibility of the ambulance builder to fix labels to these storage items declaring the maximum permitted load in production vehicles. The TS shall verify that labels are provided in the nomenclature in accordance with validated results.

Acceptance criteria for 4.5.9: the test mass shall remain fixed to the attachment point. Cracks and tears of metal sheet are acceptable.

The displacement shall be checked during the test to verify criteria 4.5.9 b).

5.4.2 Testing of the stretcher fixations on the vehicle floor

For all types, the test shall be performed with a stretcher support or floor mounted locks and an equivalent mass simulating the stretcher and the dummy whose characteristics are:

— stretcher and dummy test mass: 126 kg according to EN 1865-5:2012;

— table stretcher support as defined by the ambulance manufacturer, with maximum weight and height of the centre of gravity defined by the ambulance manufacturer.

Manufacture shall present to the TS documentation of the fixation and mounting manufacture approach prior to tests.

In addition, the stretcher support fixed in the ambulance shall comply to EN 1865-5:2012 of the interface (stretcher support).

The stretcher fixing device on the interface or on the floor should be validated by an appropriate test.

5.4.3 Testing of the medical devices fixations

For the medical equipment fastened in the vehicle, the manufacturer of the ambulance defines the type of fixation to use, the admissible mass and the location of the fixing points. The manufacturer provides recommendations to the users.

Fixing points are tested with a test mass corresponding to the permissible load declared by the manufacturer of the ambulance for each point.

5.4.4 Testing of furniture

For the same vehicle type or a specific box body, the patient's compartment furniture shall be validated utilising the worst case condition agreed with the TS.

The test is carried out according to 5.4.5.

5.4.5 Test procedure

For test purposes a surrogate stretcher can be used and shall be fixed to its locking devices in the same way as the original product, and surrogate masses representing medical devices can be used in agreement with the TS.

Verification of conformity to 4.5.9 shall be made when the stretcher(s)/medical device(s) and holding assembly is placed in the mean position of all possible positions available.

Appropriate verification shall be carried out by static or dynamic testing depending on the individual technical problem. The method of verification shall be approved by a TS.

The sample submitted for test, shall be identical to or have the same characteristics and behaviour during test as would the production item or vehicle.

Care should be taken that no internal/external additional reinforcement through the rig modifies the behaviour during the test.

The surrogate of the stretcher shall be fixed on the stretcher’s holding assembly. The non-foldable carrying chair, when provided, shall also be fixed in its holder. Representative test mass can be used.

The impact tests can be carried out with medical device(s) installed or stowed in the holding system(s) or with weights having the mass distribution and dimensions corresponding to the mass and dimensions of the stretcher(s) and device(s) intended to be installed on or stowed in the holding system.

In case of dynamic testing, the dynamic test shall be carried out using a patient’s compartment assembly approved by the TS and the following test method. When a modification to an approved ambulance patient's compartment requires testing, a relevant part of the construction may be used if approved by the TS.

The test assembly shall be accelerated/decelerated in the longitudinal, transverse and vertical directions in accordance with Figure 10. The impact speed shall be between 30 km/h and 32 km/h.

The deceleration curve is verified according to inertia mass method.

Test weights for use in lockers should be sand bags with masses in kg increments, with a tolerance of +10 % and 0 %.

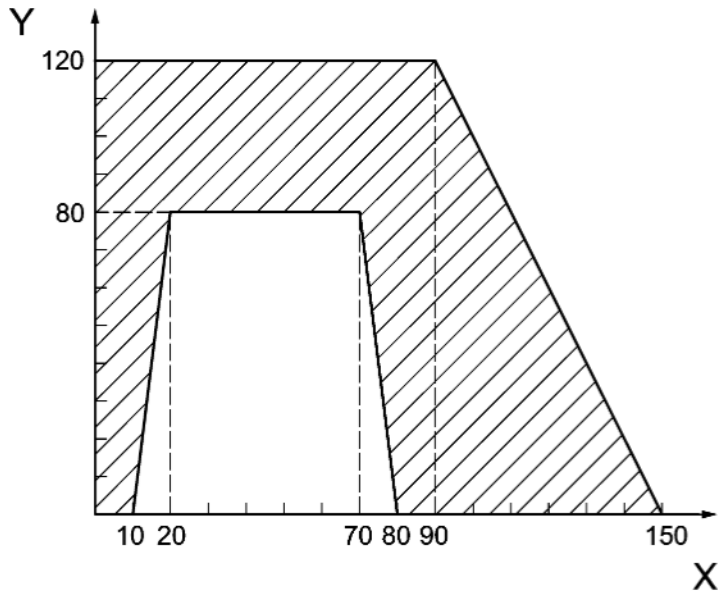

Key

X acceleration/deceleration in ms

Y acceleration/deceleration in m/s^2

Figure 10 — Acceleration impulse ⟨A2⟩

⟨A2⟩

5.5 Testing of rounded edges and radius inside the patient's compartment ⟨A2⟩

⟨A2⟩

5.5.1 Testing of rounded edges ⟨A2⟩

Conduct the test with a protrusion test ball shown in ⟨A2⟩ Figure 11 ⟨A2⟩ having a diameter of 165 mm.

⟨A2⟩

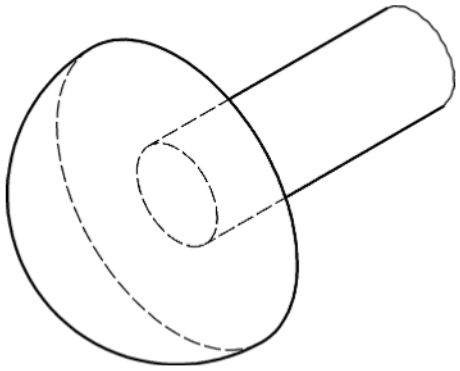

Figure 11 — Protrusion test ball ⟨A2⟩

All doors in the patient's compartment and drawers shall be in closed position. Manoeuvre the protrusion test ball in all possible attitudes towards any rigid protrusion on the furniture above the plan. The plan is the horizontal plan located at 700 mm from the lowest point of the floor excluding steps or wells.

If the protrusion test ball contacts the protrusion (see Figure 12), that protrusion shall be considered to be an exposed edge and shall comply with 4.5.1.

NOTE This test uses the principle described in 74/60/EEC or ECE R21.

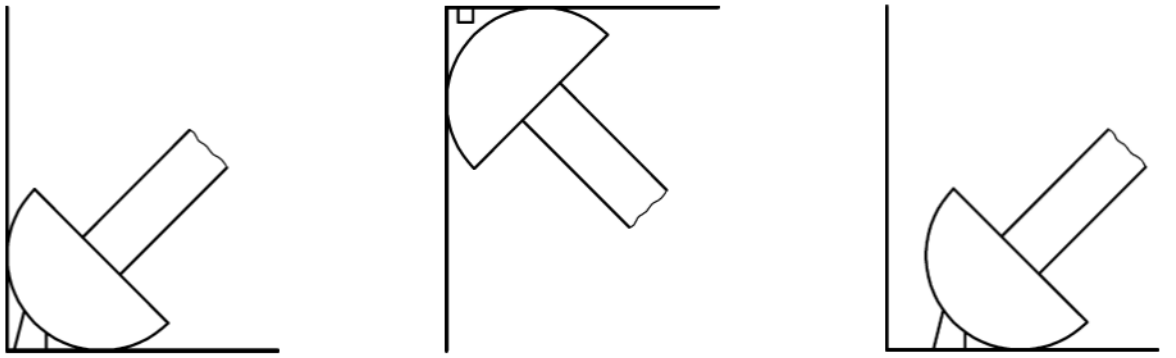

a) protrusion shall comply b) protrusion need not comply c) protrusion shall comply

Figure 12 — Examples of protrusions

5.5.2 Testing of rounded edges and radius inside the patient's compartment

Conduct the test with a radius test tool shown in Figure 13.

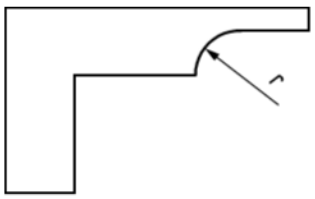

Key

r radius, r = 2,5 mm

Figure 13 — Radius test tool (example)

5.6 Procedure to verify the patient's compartment specifications

Vehicle converter shall provide the test authority with the technical specification of the flooring material and confirmation of anti-slip properties.

The manufacturer shall provide a material certificate to demonstrate that

— the edges of surfaces are designed and/or sealed in such a way that no fluid can infiltrate;

— the ceiling, the interior side walls and the doors of the patient's compartment are lined with a material that is non-permeable and resistant to disinfectant.

The criteria "The edges of surfaces shall be designed and/or sealed in such a way that no fluid can infiltrate" is not verifiable on vehicle.

The criteria "The ceiling, the interior side walls and the doors of the patient's compartment shall be lined with a material that is non-permeable and resistant to disinfectant" is not verifiable. To check compliance, request the material certificate from the manufacturer.

5.7 Procedure to verify the loading area specifications

5.7.1 General

The presented vehicle shall be equipped with a stretcher complying to EN 1865-1:2010 or EN 1865-2:2010 provided by the ambulance manufacturer and when appropriate with its stretcher support.

The test shall be conducted on a flat and horizontal surface.

5.7.2 Procedure to verify the loading angle of 16°

For verification of the loading angle see Figure 14.

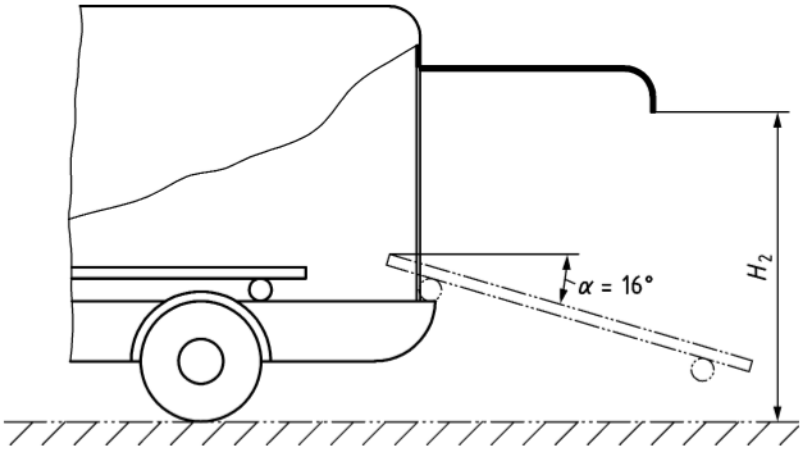

Key

H_2 tailgate height

α loading angle

Figure 14 — Verification of the loading angle

Check the loading angle with one of the stretcher specified by the manufacturer of the ambulance.

If the vehicle is fitted with lowering rear suspension, it should be fully lowered. Where standard suspension is fitted, the vehicle shall be tested with a mass of 150 kg within the patient's compartment in addition to the stretcher and its locks, mountings and loading platform where appropriate.

Where a loading ramp is provided this should be fully deployed.

For vehicles equipped with a stretcher support (lift table), position it in the loading position according to the instructions for use. In the absence of instructions, the top tray shall be positioned such that the surface to its rear end on which the attack wheels of the stretcher engage are at the same height as the tread of the stretcher attack wheels (or the top of the undercarriage if so equipped).

Loading angle α is measured as being the incline of the ramp from ground to vehicle floor or slope of the loading platform where used.

During loading or unloading, or when the stretcher is fixed in its holder in the vehicle, check any part of the plan set up through the centre of the rear handles used during loading /unloading the stretcher is at a height greater than 825 mm from the ground.

NOTE 1 It is not possible due to the diversity of stretcher/ table support/ vehicles combination to guarantee this requirement of 825 mm for all configurations.

NOTE 2 Mobile front loading ramp system is considered as the initial measuring point to check the 825 mm dimension.

NOTE 3 When a powered loading system is integrated to the stretcher or fitted to the vehicle, the 825 mm criteria is not relevant to ensure safety of the patient and comfort of the crew.

For a stretcher mounted on an undercarriage, the measurement shall be taken relative to the height defined by the gripping area of the undercarriage rather than the stretcher top handles.

If a ramp is fitted to the vehicle:

— verify the presence of non-slip coating on the vehicle;

— if the ramp is in two parts, verify the strength of the ramp by placing it in a horizontal position and by placing a load of 350 kg uniformly distributed over an area of 200 mm x 200 mm the ramp or width of the runway (see Figure 15).

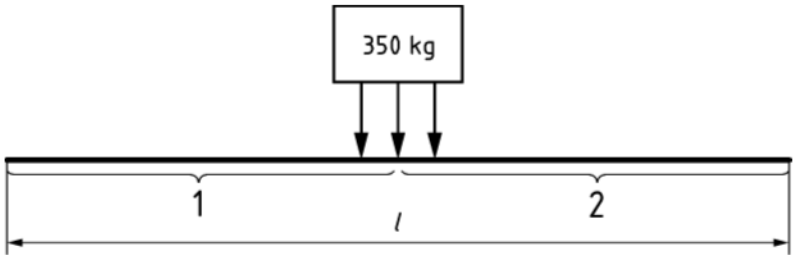

Key

l length

1 part 1

2 part 2

Figure 15 — Ramp strength test - application of the load

Check dimension H_2, with the suspension of the vehicle in same position as that recommended to check the loading angle α.

5.8 Procedure to verify the dimensions of the patient's compartment

5.8.1 Type A and B road ambulances

Dimensions shall be checked in an ambulance fully fitted with all interior and sides and ceiling lining panels. Other interior fittings and medical devices (with the exception of the stretcher and loading platform where used and permanent seats) are to be ignored for this check.

5.8.2 Type C road ambulances

The TS shall verify the dimensions of the patient's compartment.

The dimensions of the patient's compartment is checked without medical devices fitted.

To check the dimensions of the ergonomic space in the vehicle, use a main stretcher to the nominal dimensions of EN 1865-1:2010 in the position corresponding to the main settings as defined by the ambulance manufacturer.

NOTE 1 The area corresponding to the head of the stretcher stops at the articulation point of the head of the stretcher.

NOTE 2 The patient's compartment dimensions in Figure 5 are minimum dimensions except where specific figures and/or tolerances are mentioned in this standard.

Dimensions are checked to the stretcher lying surface excluding the mattress.

If the dimensions of the stretcher support are higher than those of the stretcher, check the ergonomic space dimensions around the stretcher support.

Ergonomic space is checked at the level of the horizontal plan tangent to the top tray of the stretcher support.

Consider the possible authorized maximum intrusion at the head end of the stretcher or on one side (see 4.5.2.3).

Oxygen cylinders, which can be operated from a seat and the flexible part of their support, can enter the ergonomic space under the conditions of 4.5.2.3.

The intrusion of seats is checked in the stretcher plan.

5.9 Procedure to verify the seats dimensions of the patient's compartment

Check the dimensions of the seats in Table 7 as shown in Figure 16. The dimensions of the seats shall be checked physically or by reference to drawings. Rounded corners are to be ignored.

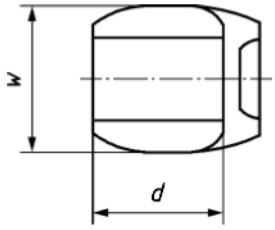

Key

w width

d depth

Figure 16 — Checking of the seat dimensions

Carrying chair: the width at the elbow level, width of the chair included, should be measured at the depth of the chair at a distance comprised between 250 mm to 300 mm above the seat (conventional elbow height).

Check that swivel seats can be locked, in predetermined position, front or rear facing.

Seats not intended for use when the vehicle is travelling are not included in this section. They are not necessarily equipped with seat belt and headrest.

In the event that the seat's design implies a reduction of the seat at the height of H point due to rotating axis: allow a significant reduction in the width at ± 30 mm of H point (dotted line on Figure 17).

Seats designed with tip up seat bases may have the 450 mm width dimension reduced adjacent to the back rest. See dotted area in Figure 17.

Ensure that the dimension of the seat is not less than a 300 mm by 450 mm rectangle taken 30 mm from R point.

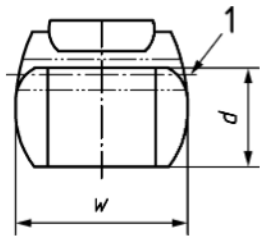

Key

w width

d depth

1 H point

Figure 17 — Measurement of 450 mm width

5.10 Testing of the ventilation system

The TS shall:

— check the technical documentation of the product;

— check by calculation that the choice of the product allows at least 20 changes per hour of the air volume of the patient's compartment (without interior arrangement).

5.11 Testing of the heating system

This procedure shall be used for all types of ambulance (A, B, C).

If necessary install a coolant temperature sensor at the T connection of the heater (engine side).

a) open the doors of the patient's compartment;

b) condition the vehicle for at least 6 h at the temperature specified in 4.5.5.1;

c) check that the patient's compartment heating system is turned off;

d) start the engine;

e) start the heater of the driver's compartment in the most favourable position;

f) operate the engine until it reaches its normal operating temperature (the engine is considered hot after two openings of the thermostat);

g) close the doors of the patient's compartment, start the heating system of the patient's compartment (control in maximum position), with the engine at idle speed or accelerated idle speed if it comes into operation during the test without manual action.

The report shall indicate if the accelerated idle came into action during the test.

Start of test: t_0

— record the temperature over time.

End of the test : t_0 + 35 min

— Validation of the test: the temperature sensors shall reach the values indicated in 4.5.5.1 at t_0 + 15 min and t_0 + 30 min

The measurements recorded on the 4 sensors at the centre of the stretcher shall meet the criteria.

Given the varying conditions of use of ambulances, check the set temperature only by comparing the displayed temperature (22°C) after 30 min temperature rise. The measured temperature shall not differ by more than 5°C.

The criteria about the absence of entering vehicle or heating system exhaust gases is verified if the additional heating system complies with directive 2001/56/EEC.

5.12 Testing of the cooling system

5.12.1 Test procedure

a) open the doors of the patient's compartment;

b) condition the vehicle for at least 6 h at the temperature specified in 4.5.5.2;

c) start the engine;

d) start the air conditioning of the driver's compartment;

e) wait for 10 min;

f) close the doors of the patient's compartment, start the air conditioning system of the patient's compartment (control in maximum position), with the engine at idle speed or accelerated idle speed if it comes into operation during the test without manual action.

Start of test: t_0

— record the temperature over time.

End of the test : t_0 + 35 min

— Validation of the test: the temperature sensors shall reach the values indicated in 4.5.5.2 at t_0 + 15 min and t_0 + 30 min.

5.12.2 Testing of independent air conditioning system

a) open the doors of the patient's compartment;

b) condition the vehicle for at least 6 h at the temperature specified in 4.5.5.2;

c) close the doors of the patient's compartment, start the air conditioning system of the patient's compartment (control in maximum position).

Start of test: t_0

— record the temperature over time.

End of the test : t_0 + 35 min

— Validation of the test: the temperature sensors shall reach the values indicated in 4.5.5.2 at t_0 + 15 min and t_0 + 30 min.

The measurements recorded on the 4 sensors at the centre of the stretcher shall meet the criteria.

Given the varying conditions of use of ambulances, check the set temperature only by comparing the displayed temperature (22°C) after 30 min temperature rise. The measured temperature shall not differ by more than 5 °C.

NOTE It is not necessary to verify the criteria about the absence of entering vehicle or heating system exhaust gases.

5.13 Testing of interior lighting

The test shall be performed in a darkroom or with the exterior surface of all saloon windows covered in non-light transmitting material to avoid light entering.

For types B and C ambulances take the lowest possible position of the stretcher into account.

The measurements shall be taken with the mattress in place.

Before starting the measurement wait a minimum of 10 min after switching the light on.

5.14 Testing of infusion holding system

The TS shall also verify the vehicle compliance when checking 4.5.9 requirements ("10 g dynamic test") or by a static test.

Each infusion holding system shall be loaded with a mass of 5 kg for a dynamic test and 7,5 kg for a static test. In the case of an adjustable/mobile holder, position the mass in the longitudinal axle of the stretcher at the middle. ⟨A2⟩

6 Medical devices

6.1 Provision of medical devices

The road ambulance shall be designed and constructed to accommodate the items listed in Tables 9 to 19 and provide the following levels of care:

— the patient transport ambulance (types A_1 and A_2) shall have basic professional equipment for first aid and nursing care;

— the emergency ambulance (type B) shall have equipment for basic treatment and monitoring of patients with the current methods of pre hospital care;

— the mobile intensive care unit (type C) shall have equipment for advanced treatment and monitoring of patients with the current methods of pre hospital intensive care.

6.2 Medical devices storage

All equipment required for a set procedure shall be stowed in a specified location. Essential equipment required for use outside the vehicle shall be easily accessible via normally used doors. All equipment shall be securely and safely stowed to prevent damage or injury whilst the vehicle is in motion (see 6.3.5).

6.3 Requirements for medical devices

6.3.1 General

The device shall be designed for use in mobile situations and in field applications[8)].

If a medical device is designated as "portable" (except patient handling equipment according to Table 9) it shall be in accordance with EN 60601-1 and shall

— be possible to be carried by one person[9)]

— have its own built in power supply (where relevant);

— be capable of use outside the vehicle.

6.3.2 Temperature

6.3.2.1 Unless otherwise marked on the device, the device shall function as described in 6.3.2.2 and 6.3.2.3 when brought back to room temperature (20 °C) after storage in temperatures ranging from –30 °C to 70 °C.

6.3.2.2 Unless otherwise marked on the device, the device shall function throughout the temperature range from 0 °C to 40 °C.

6.3.2.3 Unless otherwise marked on the device, the device shall function for at least 20 min when placed in an environment at –5 °C after storage at room temperature (20 °C).

6.3.3 Humidity and ingress of liquids

Devices shall comply with EN 60601-1 and with particular device standards of the series EN 60601-2 where applicable.

6.3.4 Mechanical strength

6.3.4.1 General

Where there are not more stringent requirements for mechanical strength in particular devices standards exists, then the following mechanical strength requirements shall apply to medical devices for use in road ambulances.

6.3.4.2 Vibration and bump

After vibration tests and bump test in accordance with 6.4.1 the maintain system and device shall function within the tolerances specified by the manufacturer.

6.3.4.3 Free fall

If the medical device is fixed, as defined in EN 60601-1 it is exempted from the free fall test.

Medical devices which are taken out of holders and/or carried by hand shall be submitted to the free fall test according to 6.4.2 and shall then function within the tolerances specified by the manufacturer.

---

8) See Directive 93/42/EEC.

9) See Directive 90/269/EEC.

NOTE A medical device may consist of fixed and loose components, the free fall test applies to the loose components only.

6.3.5 Fixation of devices

The device shall be restrained by means of a fixation system.

The fixation system(s), maintain system(s) or storage system(s) shall hold the device to withstand accelerations or decelerations of 10 g longitudinal (forward, backward), 10 g transverse (left, right) and 10 g vertical.

Terminal units and electrical socket outlets shall not be used as part of the fixation system.

If rails systems are used, they shall comply with [A2] EN ISO 19054:2006 [A2].

NOTE Rail systems consist of e.g. rail supports, rails, rail clamps, equipment mount holders, equipment mounts, equipment pin holders and equipment pins.

6.3.6 Electrical safety

All devices shall be selected and mounted so that no harmful [A2] influences [A2] to the electrical supply results.

6.3.7 User interface

Buttons, switches, indicators and controls shall be easily accessible and visible. SI units (except for blood pressure and airway pressure) and standardised graphical symbols [A2] shall be used [A2] where applicable [A2] *deleted text* [A2].

6.3.8 Gas installation

6.3.8.1 Source of supply

The source of supply shall consist of one or more of the following (see also EN 737-3:1998, 5.1.3):

a) gas in cylinders, e.g. oxygen, air;

b) non-cryogenic liquid in cylinders, e.g. N_2O, CO_2;

c) cryogenic liquid in cylinders, e.g. oxygen;

d) cryogenic liquid in stationary vessels, e.g. oxygen;

e) non-cryogenic liquid in stationary vessels, e.g. N_2O, CO_2;

f) air compressor system;

g) proportioning system, e.g. oxygen and nitrogen;

h) vacuum system.

NOTE EN 737-3 may be used as guidance for designing the source of supply. See also 4.3.4.3.

6.3.8.2 Gas piping

Gas piping shall not pass through cupboards and compartments, all ducts for gas installations or gas piping shall be vented.

6.3.8.3 Stationary oxygen supply

The stationary oxygen supply shall comprise a source in accordance with Table 11 (under normal temperature and pressure) pressure regulators and terminal units or pressure regulators with flow metering devices.

6.3.8.4 Portable oxygen supply

The portable oxygen supply shall comprise a source in accordance with Table 11 (under normal temperature and pressure) and a pressure regulator with flow metering device.

6.3.8.5 Pressure regulators and flow metering devices

Pressure regulators and pressure regulators with flow metering devices shall conform to [A2] EN ISO 10524-1:2006 [A2] or [A2] EN ISO 10524-3:2006 [A2]. The pressure regulators shall be directly connected to the source of supply.

Flow metering devices for connection to terminal units and for connection to flow-rate control units shall conform to [A2] EN ISO 15002:2008 [A2].

6.3.8.6 Terminal units

Terminal units shall comply with EN 737-1.

6.3.8.7 Pneumatic power supply

If the road ambulance is equipped with terminal units, the range of operating pressure shall be

— for compressed medical gases [A2] $400 kPa_{0}^{+100} kPa$ [A2];

— for vacuum ≤40 kPa absolute pressure

and the maximum allowable pressure change between the source of supply and the terminal units shall be

— for compressed medical gases 10 % at a flow of 40 l/min;

— for vacuum 20 % at a flow of 25 l/min.

6.3.8.8 Additional outlet connectors

For road ambulances complying with 6.3.8.7, one additional outlet connector (i.e. a terminal unit or a gas-specific connection point) complying with EN 737-1 shall be fitted in addition to the outlet connectors necessary for the devices intended to be normally used.

6.3.8.9 Test pressure

The gas piping shall withstand a pressure of 1 000 kPa, i.e. twice the maximum operating pressure of 500 kPa (see 6.3.8.7).

NOTE This pressure is also the maximum pressure supplied by pressure regulators complying with [A2] EN ISO 10524-1:2006 [A2] and [A2] EN ISO 10524-3:2006 [A2]in single fault condition.

6.3.8.10 Pin-index cylinder values

Pin-index outlet connections of cylinder values shall comply with [A2] EN ISO 407:2004 [A2].

6.3.8.11 Flexible hoses

Flexible hoses for connecting medical devices to outlet connectors (i.e. terminal units or a gas-specific connection points) shall comply with [A2] EN ISO 5359:2008 [A2]. If flexible hoses are used between the pressure regulators and the terminal units, the requirements of [A2] EN ISO 11197:2004 [A2] apply.

6.3.8.12 Alarms

If alarms are provided as part of the gas installation, they shall comply with EN 737-3:1998, Clause 6.

6.3.9 Marking and instructions

Marking and instructions for use shall comply with [A2] EN ISO 15223-1:2012 [A2] and [A2] EN 1041:2008+A1:2013 [A2].

Operating and maintenance instructions, service records and any other appropriate regulations shall accompany the product. Standardised symbols should be used or it should be written in the native language of the area where the equipment is to be used.

6.3.10 Maintenance

The manufacturer shall supply instructions for carrying out preventive maintenance.

6.4 Mechanical strength – Test methods for medical devices for use in road ambulances

6.4.1 Vibration and bump test

The medical device shall be submitted to the following tests:

— vibration (sinusoidal) according to [A2] EN 60068-2-6:2008 [A2], Test Fc;

— frequency range: 10 Hz to 150 Hz;

— amplitude/acceleration: ±0,15 mm/2 g;

— sweep rate: 1 octave/minute;

— number of sweep cycles: 4 in each axis;

— random vibration broad-band – reproducibility medium according to [A2] EN 60068-2-64:2008 [A2], Test Fh;

— ASD[10)] 10 Hz to 20 Hz: 0,05 g^2/Hz;

— ASD 20 Hz to 150 Hz: 0,05 g^2/Hz, –3 dB/Octave;

— total rms acceleration 1,6 g_{rms};

— duration/axis/mounting: 30 min;

— bump according to [A2] EN 60068-2-29:1993 [A2], Test Eb;

— peak acceleration: 15 g;

---

10) Acceleration Spectral Density.

— pulse duration: 6 ms;

— number of bumps: 1 000;

— direction: vertical, with the medical device in its normal operating position(s).

6.4.2 Free fall

The medical device shall, while functioning, be submitted to the following test:

— free fall according to ⟦A2⟧ EN 60068-2-32:1993 ⟨A2⟩, Procedure 1;

— height of fall: 0,75 m;

— number of falls: 1 on each of the six surfaces.

6.5 List of equipment

The Tables 9 to 19 designate the minimum equipment carried by the road ambulances according to their type A_1, A_2, B and C.

Where national regulations for equipment are in conflict with Tables 9 to 19 the national regulations shall apply. Supplementary devices may be introduced depending on local requirements.

However, if it is common practice for the road ambulances to cross national borders, equipment according to Tables 9 to 19 shall be carried in accordance with the vehicle type.

For most items a specific quantity is given. "X" in the column indicates that quantity may be varied in accordance with the local needs of the country/district.

Where applicable the equipment shall be available across the full age range of patients.

The minimum mass including a mass reserve required for the listed sanitary, medical and technical devices in Tables 9 to 19 shall be as follows:

Road ambulance	type A_1	100 kg;
	type A_2	115 kg;
	type B	225 kg;
	type C	260 kg.

Table 9 — Type of patient handling equipment

No	Device	Standard	Type of road ambulances			
			A_1	A_2	B	C
1	Main stretcher/undercarriage	[A2] EN 1865-1:2010 [A2]	1	1	1	1
2	Pick up stretcher	[A2] EN 1865-1:2010 [A2]	–	–	1	1
3	Vacuum mattress	[A2] EN 1865-1:2010 [A2]	–	–	1	1
4	Device for conveying a seated patient [a]	[A2] EN 1865-1:2010 and EN 1865-4:2012 [A2]	1	1	1	X
5	Carrying sheet or transfer mattress	[A2] EN 1865-1:2010 [A2]	1	1	1	1
6	Long spinal board complete with head immobilizer and securing straps	[A2] EN 1865-1:2010 [A2]	–	–	X	X

[a] Unless the main stretcher has the function of these devices.

Table 10 — Type of immobilization equipment

No	Device	Standard	Type of road ambulance			
			A_1	A_2	B	C
1	Traction device	–	–	–	X	X
2	Immobilization, set for fractures	–	–	–	1	1
3	Cervical upper spinal immobilization devices Cervical collar-set	–	–	–	1	1
4	Extended upper spinal immobilization Extrication devices or short spinal board (one of these)	–	–	–	1	1

Table 11— Type of ventilation/respiration equipment

No	Device		Standard	Type of road ambulance			
				A_1	A_2	B	C
1	Stationary oxygen [a] Minimum 2 000 l, (under normal temperature and pressure), flowmeter/flowgauge with maximum capacity of at least 15 l/min and regulating valve		EN 737-1:1998	X	X	1	1
		quick connection	EN 737-1:1998	–	–	1	1
2	Portable oxygen [b] Minimum 400 l, (under normal temperature and pressure), flowmeter/flowgauge with maximum capacity of at least 15 l/min and regulating valve		EN 737-1:1998	1	1	1	1
		quick connection	EN 737-1:1998	–	–	1	1
3	Resuscitator with oxygen inlet and masks and airways for all ages and oxygen reservoir		–	X	X	1	1
4	Mouth to mask ventilator with oxygen inlet		–	1	1	–	–
5	Non-manual suction device with a minimum pressure of –65 kPa with a minimum capacity of 1 l		EN ISO 10079-1:1999 EN ISO 10079-3:1999	–	–	1	1
6	Portable suction device		EN ISO 10079-2:1999	1	1	1	1

[a] A reduced capacity of 1 000 l may be fitted in type A_1 and A_2 road ambulances.

[b] A reduced capacity of 200 l may be fitted in type A_1 and A_2 road ambulances.

Table 12 — Type of diagnostics equipment

No	Device	Standard	Type of road ambulance			
			A_1	A_2	B	C
1	Manual B P Monitor, Cuff size 10 cm – 66 cm	–	–	–	1	1
2	Automatic B P Monitor, Cuff size 10 cm – 66 cm A doppler type shall operate accurately in the conditions of electrical interference and vibration specified in 4.3.1 and 6.3.4	–	–	–	X	X
3	Oximeter	[A2] EN ISO 80601-2-61:2011 [A2]	–	–	1	1
4	Stethoscope	–	–	–	1	1
5	Thermometer Minimum range 28 °C to 42 °C	[A2] EN 12470-1:2000+A1:2009 [A2]	–	–	1	1
6	Device for blood sugar determination	–	–	–	1	1
7	Diagnostic light	–	–	–	1	1

Table 13 — Type of drug

No	Type of drug	Standard	Type of road ambulance			
			A_1	A_2	B	C
1	Pain relief	–	–	–	X	X

Table 14 — Type of infusion material or equipment

No	Device	Standard	Type of road ambulance			
			A_1	A_2	B	C
1	Infusion solutions, litre	–	–	–	4	4
2	Equipment for injections and infusions, set	–	–	–	2	2
3	Infusion system which is designed to allow the administration of fluid warmed to (37 ± 2) °C. This system is not required to be portable	–	–	–	1	1
4	Infusion mounting	–	1	1	2	2
5	Pressure infusion device	–	–	–	1	1

Table 15 — Type of equipment for managing of life-threatening problems

No	Device	Standard	Type of road ambulance			
			A_1	A_2	B	C
1	Defibrillator with rhythm and patient data recording [a]	[A2] EN 60601-2-4:2011 [A2]	1	1	1	1
2	Cardiac monitor [a]	[A2] EN 60601-2-4:2011 [A2]	–	–	1	1
3	External cardiac pacing [a]	[A2] EN 60601-2-4:2011 [A2]	–	–	X	1
4	Portable airways care system (p.a.c.s.) Manual resuscitator Mouth to mask ventilator with oxygen inlet Airways oro- or nasopharyngeal airway Aspirator Suction catheter	–	–	–	1	–
5	Portable advanced resuscitation system (p.a.r.s.) Contents of portable airways care system (p.a.c.s.) Infusion equipment – to include suitable venous indwelling cannulae Infusion administration sets Infusion solutions Adhesive fixing materials Intubation equipment – to include laryngoscope handle(s) with suitable blades Magill forceps Insertion stylets Endotracheal tubes with connectors Inflation tube clamp Inflation syringe Tube fixing material Stethoscope Drug administration equipment	–	–	–	–	1
6	Nebulization apparatus	[A2] EN 13544-1:2007+A1:2009 [A2]	–	–	1	1
7	Thorax drainage kit	–	–	–	–	1

8	Volumetric infusing device	–	–	–	–	1
9	Central vein catheters	–	–	–	–	1
10	Requirements for emergency and transport ventilators	[A2] EN 794-3:1998+A2:2009 [A2]	–	–	–	1
11	PEEP-valve, adjustable or set	–	–	–	–	1
12	Capnometer	[A2] EN ISO 80601-2-55:2011 [A2]	–	–	–	1
a If desired two or more of these functions can be combined within one device.						

Table 16 — Bandaging and nursing

No	Device	Standard	Type of road ambulance			
			A_1	A_2	B	C
1	Bedding equipment	–	1	2	1	1
2	Blankets	–	2	4	2	2
3	Material for treatment of wounds	–	1	1	1	1
4	Material for treatment of burns and corrosives	–	–	–	1	1
5	Re-plantation container to maintain the internal temperature at (4 ± 2) °C for at least 2 h	–	–	–	X	X
6	Kidney bowl	–	1	2	1	1
7	Vomiting bag	–	1	2	1	1
8	Bed-pan	–	X	X	X	X
9	Non-glass urine bottle	–	1	2	1	1
10	Sharps container	–	1	1	1	1
11	Gastric tube with accessories	–	–	–	X	X
12	Sterile surgical gloves, pairs	[A2] EN 455-1:2000 [A2], [A2] EN 455-2:2009+A2:2013 [A2]	X	X	5	5
13	Non-sterile gloves for single use	[A2] EN 455-1:2000 [A2], [A2] EN 455-2:2009+A2:2013 [A2]	100	100	100	100
14	Emergency delivery kit	–	X	X	1	1
15	Waste bag	–	1	1	1	1
16	Clinical waste bag	–	X	X	X	X
17	Non-wovens stretcher sheet	–	1	1	1	1

Table 17 — Personal protection equipment (for each member of the crew for protection and to identify the staff as road ambulance personnel)

No	Device	Standard	Type of road ambulance			
			A_1 [a]	A_2 [a]	B [a]	C [a]
1	Basic protective clothing including high visibility reflective jacket or tabard	[A2] EN ISO 20 471:2013 [A2]	1	1	1	1
2	Advanced protection wear	–	–	–	X	X
3	Safety/debris gloves, pairs	[A2] EN 420:20 03+A1:2009 [A2]	1	1	1	1
4	Safety shoes, pairs	[A2] EN ISO 20345:20 11 [A2]	X	X	1	1
5	Safety helmet	[A2] EN 14052: 2012+A1:2012 [A2]	–	–	1	1
6	Personal protection equipment against infection	–	–	–	1	1

[a] Numbers are quoted per crew member.

Table 18 — Rescue and protection material

No	Device	Standard	Type of road ambulance			
			A_1	A_2	B	C
1	Cleaning and disinfection material	–	1	1	1	1
2	Light rescue tools, set	–	–	–	X	X
3	Seat belt cutter	–	1	1	1	1
4	Warning triangle/lights	–	2	2	2	2
5	Spotlight	–	1	1	1	1
6	Fire extinguisher	[A2] EN 3-7:2004+A1:20 07 [A2]	1	1	1	1

Table 19 — Communication

No	Device	Standard	Type of road ambulance			
			A_1	A_2	B	C
1	Mobile radio transceiver	–	1	1	1	1
2	Portable radio transceiver	–	–	–	1	1
3	Access to the public telephone network e.g. via the normal radio transmitter or by mobile (cellular) telephone	–	–	–	1	1
4	Portable alerting system, per person Can be included in portable radio receiver	–	–	–	1	1
5	Internal communication between driver and patient compartment	–	1	1	1	1

〈A2〉

7 Conformity assessment

Clause 5 and Annex A specify the test summary. The means of verification (MoV) to establish a compliance are deliverables or tests to be performed to allow the TS to establish the compliance of the ambulance to this standard:

a) Documentary:

   1) control record (CsD);

   2) approval document (FdC);

   3) manufacturer certificate (AC).

b) Testing or inspection of vehicles and / or subassemblies:

   1) control on vehicle (CsV);

   2) testing by third-party (ETP). 〈A2〉

〈A2〉

8 Requirements to be met for a Certificate of Compliance

An ambulance belongs to a vehicle type specially adapted to medical transportation in due regard to this standard, to obtain a certificate of compliance if it has the following features in common:

a) base vehicle description (list of TVV declared by the bodybuilder and covered by the multi-stage type-approval);

b) bodybuilder;

c) type of ambulance in accordance with this standard (type A_1, A_2 B or C);

d) patient's compartment;

1) number of stretcher(s);

2) number of seats in road use;

3) dimension of the patient's compartment or ergonomic space.

NOTE Under item d) several layouts of the patient's compartment can be covered in the same type of vehicles specially adapted to medical transportation in due regard to this standard. 〈A2〉

Annex A
(informative)

A2 Test summary

This is to certify that ambulance compartment produced by……

on the chassis……..

equipped as a ..... (type A B or C) ambulance complies with EN 1789:2007+A2:2014, 4.5.9 and 5.4 Static and/or

dynamic tests have been carried from……..... to

…..……(dates)

Detailed data are to be found in test report number .....

Authorized designated official ..... (name)

Signed .....

Date..... A2

Annex B
(informative)

A2 Definition of ambulance body styles

B.1 General

This annex provides a definition and illustration of the various types of ambulance bodies.

B.2 Van based Ambulance

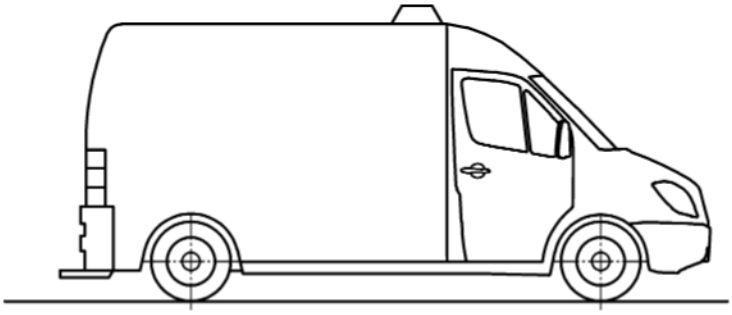

Figure B.1 — Integrated body shell (panelled van)

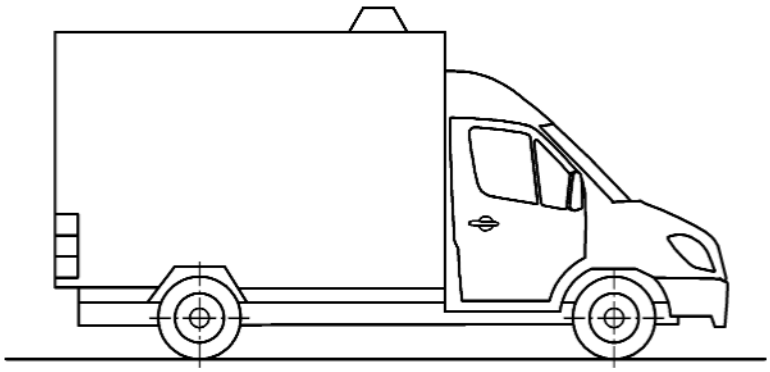

Figure B.2 — Semi integrated box body (Bulkhead integrated to the vehicle)

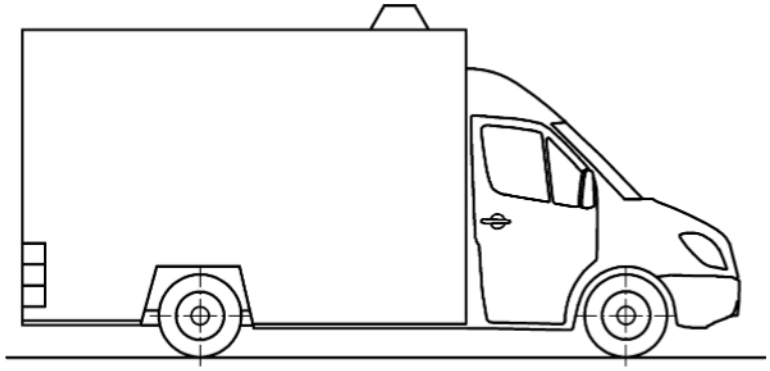

Figure B.3 — Semi integrated box body (box body mounted to platform cab and retaining original cab fixed bulkhead)

B.3 Fully independent box body

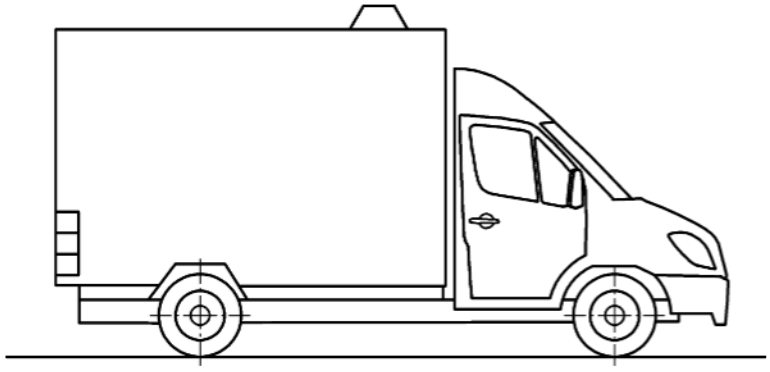

Figure B.4 — Fully independent box body mounted on the chassis cab by fixation points (body is a self-supporting unit) A2

Annex C
(informative)

A2 Recognition

C.1 Recognition and visibility of ambulances

To enhance the recognition and visibility of the vehicle in daylight the base body colour should be yellow (RAL 1016)[11)] or white.

Where the white body option is selected additional fluorescent yellow or yellow (RAL 1016)[11)] or fluorescent red (RAL 3024) [11)] should be used on the external surface of the vehicles.

For night time visibility micro-prismatic reflective material should be applied.

With the exception of Red Cross societies or where the "Star of life" is locally registered, a blue reflective "Star of life" emblem (minimum size 500 mm) together with reflective letters, numerals or a symbol identifying the organization and the vehicle, should be applied to the roof of the ambulance.

With the exception of Red Cross societies or where the "Star of life" is locally registered, a blue reflective "Star of life" emblem should be applied to the sides and rear of the ambulance. The word "ambulance" or equivalent national translation should be applied in reflective upper case letters, a minimum of 100 mm high, in a colour contrasting with the background, to the side and rear of the ambulance and if possible on the front.

C.2 Recognition of personnel

Safety garments should conform to at least class 2 of EN ISO 20471:2013.

With the exception of Red Cross societies or where the "Star of life" is locally registered, a blue reflective “Star of Life” emblem should be fixed to the garments. The garments should identify the designation of the wearer. A2

11 RAL colour space system, maintained by Deutsches Institut für Gütesicherung und Kennzeichnung e.V

Annex ZA
(informative)

[A1] [A2] Relationship between this European Standard and the Essential Requirements of EC Directive 93/42/EEC on Medical Devices and Directive 2007/46/EC of the European Parliament and of the Council of 5 September 2007 establishing a framework for the approval of motor vehicles and their trailers, and of systems, components and separate technical units intended for such vehicles [A2]

This European Standard has been prepared under a mandate given to CEN by the European Commission and the European Free Trade Association to provide a means of conforming to Essential Requirements of the New Approach Directive 93/42/EEC on Medical Devices.

Once this standard is cited in the Official Journal of the European Union under that Directive and has been implemented as a national standard in at least one Member State, compliance with the clauses of this standard given in Table ZA.1 confers, within the limits of the scope of this standard, a presumption of conformity with the corresponding Essential Requirements of that Directive and associated EFTA regulations.

Table ZA.1 — Correspondence between this European Standard and Directive 93/42/EEC on Medical [A2] Devices [A2]

[A2]

Clause(s)/subclause(s) of this EN	Essential Requirements (ERs) of Directive 93/42/EEC	Qualifying remarks/Notes
6.3.8	9.1, first sentence only	Covered as far as the gas installation is concerned
4.1.1, 6.3.2, 6.3.4, 6.3.5, 6.3.6, 6.3.8, 6.4	9.2, second indent	To fully cover this ER, risks connected with reasonably foreseeable environmental conditions shall be removed or minimized as far as possible
4.1.1, 6.3.8	9.3	To fully cover this ER, risks connected with fire or explosion shall be minimized
6.3.4	12.7.1	

[A2]

General note: Ambulances are not considered to be medical devices. However, ambulances are designed to accommodate medical devices and some clauses of this standard specify requirements for devices carried and used in ambulances. Compliance with the clauses listed above and subsequent presumption of conformity with the corresponding ERs of the directive only applies to these medical devices.

WARNING — Other requirements and other EU Directives may be applicable to the product(s) falling within the scope of this standard. [A1]

Bibliography

[1] Council Directive 70/156/EEC of 6 February 1970 on the approximation of the laws of the Members States relating to the type-approval of motor vehicles and their trailers

[2] Council Directive 72/245/EEC of 20 June 1972 on the approximation of the laws of the Members States relating to the suppression of radio interference produced by spark-ignition engines fitted to motor vehicles

[3] Council Directive 74/408/EEC of 22 July 1974 on the approximation of the laws of the Member States relating to the interior fittings of motor vehicles (strength of seats and of their anchorages)

[4] Council Directive 76/115/EEC of 18 December 1975 on the approximation of the laws of the Member States relating to anchorages for motor-vehicle safety belts

[5] Council Directive 77/541/EEC of 28 June 1977 on the approximation of the laws of the Member States relating to safety belts and restraint systems of motor vehicles

[6] Council Directive 78/932/EEC of 16 October 1978 on the approximation of the laws of the Member States relating to head restraints of seats of motor vehicles

[7] Council Directive 90/269/EEC of 29 May 1990 on the minimum health and safety requirements for the manual handling of loads where there is a risk particularly of back injury to workers (fourth individual Directive within the meaning of Article 16 (1) of Directive 89/391/EEC)

[8] Council Directive 92/21/EEC of 31 March 1992 on the masses and dimensions of motor vehicles of category M1

[9] Council Directive 92/22/EEC of 31 March 1992 on safety glazing and glazing materials on motor vehicles and their trailers

[10] Council Directive 93/42/EEC of 14 June 1993 concerning medical devices

[11] Directive 96/79/EC of the European Parliament and of the Council of 16 December 1996 on the protection of occupants of motor vehicles in the event of a frontal impact and amending Directive 70/156/EEC

[12] Commission Directive 2004/104/EC of 14 October 2004 adapting to technical progress Council Directive 72/245/EEC relating to the radio interference (electromagnetic compatibility) of vehicles and amending Directive 70/156/EEC on the approximation of the laws of the Member States relating to the type-approval of motor vehicles and their trailers

[13] ECE-Regulation No. 16; revision 3; uniform provisions concerning the approval of safety-belts and restraint systems for adult occupants of power- driven vehicles

[14] EN ISO 7396-2, *Medical gas pipeline systems - Part 2: Anaesthetic gas scavenging disposal systems (ISO 7396-2:2007)*